Owner's Guide
and
Installation Instructions

Rheem Commpak®
CP02-CP06
Commercial Hot Water Systems

INSTALLER:

The ONLY suitable flue parts are certified Rheem coaxial flue components carrying the following label:

DO NOT use any other type of flue parts.
Carefully follow the Installation Instructions.

OPERATOR:

DO NOT OPERATE THIS WATER HEATER:

- **Unless a certified Rheem coaxial flue system, venting to the outside through a certified Rheem terminal, is installed in accordance with the Installation Instructions.**
- **If a loud continued vibration occurs during operation**

Install a Rheem

This water heater must be installed and serviced by a qualified person.
Please leave this guide with a responsible officer.

Warning: Upon completion of the installation and commissioning of the water heater, leave this guide with a responsible officer or the householder. **DO NOT** leave this guide inside of the cover of the water heater, as it may interfere with the safe operation of the water heater or ignite when the water heater is turned on.

Operational design of this Hot Water System is protected by Australian Patent No: 2007201101.

RESPONSIBLE OFFICER AND INSTALLER PLEASE NOTE

This Owner's Guide and Installation Instructions is shared for the Australian and New Zealand markets.

Where the content of this document is specific to either market, it is marked with either AU for Australian specific content or NZ for New Zealand specific content.

The 862627 models in natural gas and propane gas fuel types are sold in Australia.
References to Universal LP Gas models do not apply to the Australian market.

The 862627 models in natural gas and Universal LP Gas fuel types are sold in New Zealand.
References to propane gas models do not apply to the New Zealand market.

An electronic copy of these Owner's Guide and Installation Instructions can be downloaded from rheem.com.au and rheem.co.nz.

Rheem Australia Pty Ltd and Rheem New Zealand Limited are the suppliers of the Rheem range of continuous flow gas water heaters, manufactured in Japan by Paloma Co., Ltd., a world leader in water heater technology and manufacture.

PATENTS

This water heater may be protected by one or more patents or registered designs in the name of Rheem Australia Pty Ltd, Rheem New Zealand Limited or Paloma Co., Ltd.
Operation design of the Hot Water System is protected by Australian Patent No 2007201101

TRADEMARKS

® Registered trademark of Rheem Australia Pty Ltd., or Rheem New Zealand Limited.
™ Trademark of Rheem Australia Pty Ltd., or Rheem New Zealand Limited.

Note: Every care has been taken to ensure accuracy in preparation of this publication.
No liability can be accepted for any consequences, which may arise as a result of its application.

CONTENTS

This booklet contains important information about your new water heater, including terms of the Rheem warranty.

We recommend you read pages **7 to 16,** and the terms of the Rheem warranty on pages **4 to 6**

The other pages are intended for the installer but may be of interest.

Contents 3

Rheem Continuous Flow Gas Water Heater Warranty – Australia Only 4

Safety, Warnings and Installation Notes 7

About your water heater 9

Water Supplies 14

Save A Service Call 15

Commpak – Technical Specifications 17

Installation – Water Heater 23

Connections – Plumbing 27

Flueing 28

Connections - Electrical 46

Major Components Listing 49

Commissioning 51

Commpak Pump Details 63

Commpak Controller Details 72

Appendix 1 - Lifting 81

RHEEM CONTINUOUS FLOW GAS WATER HEATER WARRANTY – AUSTRALIA ONLY

CONTINUOUS FLOW GAS WATER HEATER COMMPAK MODELS CP02-CP06

1. THE RHEEM WARRANTY – GENERAL

1.1 This warranty is given in Australia by Rheem Australia Pty Limited ABN 21 098 823 511 of 1 Alan Street, Rydalmere New South Wales, and in New Zealand by Rheem New Zealand Limited of 475 Rosebank Road Avondale Auckland 1026, the suppliers of Rheem continuous flow gas water heaters.

1.2 Rheem offer a trained and qualified national service network who will repair or replace components at the address of the water heater subject to the terms of the Rheem warranty. Rheem Service, in addition can provide preventative maintenance and advice on the operation of your water heater. The Rheem Service contact number in Australia is 131031, with Contact Centre personnel available 24 hours, 7 days a week to take your call and if necessary to arrange a service call for during normal working hours Monday to Friday (hours subject to change) or in New Zealand on 0800 657 335.

1.3 For details about this warranty, you can contact us in Australia on 131031 or by email at warrantyenquiry@rheem.com.au (not for service bookings), or in New Zealand on 0800 657 335 or by email at rheem@rheem.co.nz (not for service bookings).

1.4 The terms of this warranty and what is covered by it are set out in sections 2 and 3 and apply to water heaters manufactured after 1st September 2018.

1.5 If a subsequent version of this warranty is published, the terms of that warranty and what is covered by it will apply to water heaters manufactured after the date specified in the subsequent version.

2. TERMS OF THE RHEEM WARRANTY AND EXCLUSIONS TO IT

2.1 The decision of whether to repair or replace a faulty component is at Rheem's sole discretion.

2.2 If you require a call out and we find that the fault is not covered by the Rheem warranty, you are responsible for our standard call out charge. If you wish to have the relevant component repaired or replaced by Rheem, that service will be at your cost.

2.3 Where a failed component or cylinder is replaced under this warranty, the balance of the original warranty period will remain effective. The replacement does not carry a new Rheem warranty.

2.4 Where the water heater is installed outside the boundaries of a metropolitan area as defined by Rheem or further than 25 km from either a regional Rheem branch office or an Accredited Rheem Service Agent's / Centre's office, the cost of transport, insurance and travelling between the nearest branch office or Rheem Accredited Service Agent's / Centre's office and the installed site shall be the owner's responsibility.

2.5 Where the water heater is installed in a position that does not allow safe or ready access, the cost of that access, including the cost of additional materials handling and/or safety equipment, shall be the owner's responsibility. In other words, the cost of dismantling or removing cupboards, doors or walls and the cost of any special equipment to bring the water heater to floor or ground level or to a serviceable position is not covered by this warranty.

2.6 This warranty only applies to the original and genuine Rheem water heater in its original installed location and any genuine Rheem replacement parts.

2.7 The Rheem warranty does not cover faults that are a result of:

a) Accidental damage to the water heater or any component (for example: (i) Acts of God such as floods, storms, fires, lightning strikes and the like; and (ii) third party acts or omissions).

b) Misuse or abnormal use of the water heater.

c) Installation not in accordance with the Owner's Guide and Installation Instructions or with relevant statutory and local requirements in the State or Territory in which the water heater is installed.

d) Connection at any time to a water supply that does not comply with the water supply guidelines as outlined in the Owner's Guide and Installation Instructions.

e) Repairs, attempts to repair or modifications to the water heater by a person other than Rheem Service or a Rheem Accredited Service Agent / Centre.

CONTINUOUS FLOW GAS WATER HEATER COMMIPAK MODELS CP02-CP06

f) Faulty plumbing or faulty gas or power supply.

g) Failure to maintain the water heater in accordance with the Owner's Guide and Installation Instructions.

h) Transport damage.

i) Fair wear and tear from adverse conditions (for example, corrosion).

j) Cosmetic defects.

k) Ice formation in the waterways of a water heater: where the electricity supply has been switched off or has failed and the water heater has not been drained in accordance with the instructions; or due to an ambient temperature below -20°C (including wind chill factor).

2.8 Subject to any statutory provisions to the contrary, this warranty excludes any and all claims for damage to furniture, carpet, walls, foundations or any other consequential loss either directly or indirectly due to leakage from the water heater, or due to leakage from fittings and/ or pipe work of metal, plastic or other materials caused by water temperature, workmanship or other modes of failure.

2.9 If the water heater is not sized to supply the hot water demand in accordance with the guidelines in the Rheem water heater literature, any resultant fault will not be covered by the Rheem warranty.

2.10 In New Zealand this warranty excludes to the extent permissible all implied warranties set out in the Sale of Goods Act 1908 (New Zealand) and all guarantees set out in the Consumers Guarantees Act 1993 (New Zealand) to the extent that the goods are acquired for the purpose of resupply in trade consumption in the course of a process of production or manufacture or repairing or treating in trade other goods or fixtures on land.

3. WHAT IS COVERED BY THE RHEEM WARRANTY FOR THE WATER HEATERS DETAILED IN THIS DOCUMENT

3.1 Rheem will repair or replace a faulty component of your water heater if it fails to operate in accordance with its specifications as follows:

What components are covered	The period from the date of installation in which the fault must appear in order to be covered	What coverage you receive
All components	Year 1	Repair and/or replacement of the faulty component, free of charge, including labour.
CFWH (only if the water heater is installed in a single-family domestic dwelling with a preset outlet temperature setting below 76°C)	Years 2 & 3	Repair and/or replacement of the faulty component, free of charge, including labour.
The heat exchanger (if the water heater is installed in a single-family domestic dwelling with a preset outlet temperature setting below 76°C)	Years 4 to 10	Replacement heat exchanger, free of charge. Installation and repair labour costs are the responsibility of the owner.
The heat exchanger (if the water heater is not installed in a single-family domestic dwelling with a preset outlet temperature setting below 76°C)	Years 2 to 5	Replacement heat exchanger, free of charge. Installation and repair labour costs are the responsibility of the owner.
The heat exchanger (with a thermostat setting greater than 75ºC)	Year 1	Repair and/or replacement of the faulty component, free of charge, including labour.

CONTINUOUS FLOW GAS WATER HEATER COMMPAK MODELS CP02-CP06

4. ENTITLEMENT TO MAKE A CLAIM UNDER THIS WARRANTY

4.1 To be entitled to make a claim under this warranty you need to:

a) Be the owner of the water heater or have consent of the owner to act on their behalf.

b) Contact Rheem Service without undue delay after detection of the defect and, in any event, within the applicable warranty period.

4.2 You are **not** entitled to make a claim under this warranty if your water heater:

a) Does not have its original serial numbers or rating labels.

b) Is not installed in Australia or New Zealand.

5. HOW TO MAKE A CLAIM UNDER THIS WARRANTY

5.1 If you wish to make a claim under this warranty, you need to:

a) Contact Rheem on 131031 in Australia or 0800 657 335 in New Zealand and provide owner's details, address of the water heater, a contact number and date of installation of the water heater or if that's unavailable, the date of manufacture and serial number (from the rating label on the water heater).

b) Rheem will arrange for the water heater to be tested and assessed on-site.

c) If Rheem determines that you have a valid warranty claim, Rheem will repair or replace the water heater in accordance with this warranty.

5.2 Any expenses incurred in the making of a claim under this warranty will be borne by you.

6. THE AUSTRALIAN CONSUMER LAW

6.1 In Australia, our goods come with guarantees that cannot be excluded under the Australian Consumer Law. You are entitled to a replacement or refund for a major failure and for compensation for any other reasonably foreseeable loss or damage. You are also entitled to have the goods repaired or replaced if the goods fail to be of acceptable quality and the failure does not amount to a major failure.

6.2 The Rheem warranty (set out above) is in addition to any rights and remedies that you may have under the Australian Consumer Law.

7. THE CONSUMER GUARANTEES ACT 1993 (NEW ZEALAND)

7.1 In New Zealand, our goods come with guarantees that cannot be excluded under the Consumer Guarantees Act 1993 (New Zealand). If the goods fail to comply with the applicable guarantees set out under the Consumer Guarantees Act 1993 (New Zealand) being the guarantee as to acceptable quality, the guarantee as to correspondence with description or the guarantee as to repair and parts, or if the goods fail to comply with any express guarantee given by Rheem, then you are entitled to a replacement or refund and for compensation for any other reasonably foreseeable loss or damage.

7.2 The Rheem warranty (set out above) is in addition to any rights and remedies that you may have under the Consumer Guarantees Act 1993 (New Zealand).

SAFETY, WARNINGS AND INSTALLATION NOTES

It is important you read the following safety and warnings information.

⚠ SAFETY AND WARNINGS

- This water heater is only intended to be operated by persons who have the experience or the knowledge and the capabilities to do so.
- This water heater is not intended to be operated by persons with reduced physical, sensory or mental capabilities i.e. the infirm, or by children. Children should be supervised to ensure they do not interfere with the water heater.
- If the power supply cord or plug is damaged, it must be replaced by a qualified person in order to avoid a hazard. The power supply cord and plug must be replaced with a genuine replacement part available from Rheem. Phone Rheem Service or their nearest Accredited Service Agent / Centre to arrange for an inspection.
- The power lead from the water heater must be plugged into a weatherproof electrical outlet. Take care not to touch the power plug with wet hands.
- The water heater uses 220 - 240 V a.c. electrical power for operation of the control systems and the combustion fan. The removal of the front panel will expose 220 - 240 V a.c. wiring. It must only be removed by a qualified person.
- This water heater is supplied with temperature sensors, a FlameSafe® protection system and a pressure relief valve. These devices must not be tampered with or removed. The water heater must not be operated unless each of these devices is fitted and is in working order.

  The Rheem warranty may not cover faults if safety devices or the relief valve are tampered with or if the installation is not in accordance with these instructions.
- Temperature controllers **must not** be fitted to this water heater (862 series) if it is installed as an in-series gas booster with a solar water heater system because water at a temperature much higher than the controller setting can be delivered. If a solar water heater is installed to an existing water heater installation, then all controllers **must be** disconnected and removed.
- For continued safety of this water heater it must be installed, operated and maintained in accordance with the Owner's Guide and Installation Instructions.
- Servicing of the water heater must only be carried out by qualified personnel. Phone Rheem Service or their nearest Accredited Service Agent / Centre.
- Do not modify this water heater.
- Switch off the electrical supply at the power outlet to the water heater prior to performing general maintenance. This will prevent the water heater from operating while you clean or spray around the water heater. Refer to "General Maintenance" on page **11** for additional information.
- Do not spray **aerosols** in the vicinity of this water heater while it is in operation. Propellants and gases in many aerosol sprays contain hydrocarbons which are flammable. Gases from aerosol sprays may also become corrosive when drawn into a flame.
- Do not use or store **flammable materials** in or near this water heater. Flammable liquids (such as petrol), combustible materials (such as newspapers) and similar articles must be kept well away from the water heater and the flue terminal.
- Do not store **swimming pool chemicals, household cleaners**, etc., near the water heater.
- Do not place articles on or against this water heater, or in contact with the flue terminal. Ensure the flue terminal is not obstructed in any way at any time.

- Do not use Propane / Butane gas mixtures in a Propane model. A Propane model is designed to operate on Propane only. The use of Propane / Butane mixture, such as automotive LP gas fuel, in a Propane model is unsafe and can cause damage to the water heater.

  Note: LP gas models sold in New Zealand are designed to operate on the Propane / Butane mixture supplied in New Zealand. An LP gas model has an LFZ suffix in its model number.

- The water heater has a frost protection system to protect against damage by preventing ice forming in the waterways of the water heater, in the event of freezing conditions occurring. The frost protection system will be rendered inoperable if electrical power is not available at the water heater. If it is necessary to switch the power off to the water heater and there is a risk of freezing, then it is necessary to drain the water heater. Refer "Frost Protection" on page **12** and to "Draining the Water Heater" on page Error! Bookmark not defined..

INSTALLATION NOTES

This water heater must be installed:

- by a qualified person,
- in accordance with the installation instructions,
- in compliance with the Plumbing Code of Australia (PCA) and Plumbing Standard AS/NZS 3500.4,
  - This water heater is designed for indoor installation only.
  - This water heater is intended to be permanently connected to the water mains and not connected by a hose-set. A braided flexible hose or semi-flexible connector may be used for connection to the water heater, where permitted by AS/NZS 3500.4.
- in compliance with the Gas Installations Standard AS/NZS 5601.1,
- in compliance with all local codes and regulatory authority requirements,
- in New Zealand also conforming to Clauses G11, G12 and H1 of the New Zealand Building Code.

Installation and commissioning requirements and details for the installing plumber and licensed electrical worker are contained on pages **23** to **62**.

Mains pressure water supply

The water heater is designed to operate at mains pressure by connecting directly to the mains water supply.

The maximum mains water supply pressure for the water heater is 1,000 kPa. If the mains supply pressure in your area exceeds 1,000 kPa, an approved pressure limiting valve that does not have non-return valve characteristics (such as an RMC PSL series valve) must be installed.

A minimum water supply pressure of 140 kPa is required to achieve the rated flow and performance of the water heater.

Refer to "Mains Water Supply" on page **25** for additional information.

Mounting of the water heater

This water heater must be installed vertically upright with the water, gas and power connections on the underside, pointing toward the ground. The back of the water heater can be either against a wall or free standing, depending on the model selected. The water heater must be well secured to the wall or frame using suitable fasteners that can bear the weight of the product and suitable for the wall or frame type.

ABOUT YOUR WATER HEATER

The Rheem Commpak is a bank of two, three, four, five or six continuous flow water heaters (CFWH), factory manifolded in parallel complete with pump/s, temperature sensors and a controller. All components are factory assembled on a lightweight frame suitable for floor mounting either in line or back to back.

This water heater is designed for the purpose of heating potable water. Its use in an application other than this may shorten its life.

The Rheem Commpak is designed to provide mains pressure performance with a recirculating capacity for small to medium size developments and suitable for:

- Outdoor and Indoor installations
- Natural Gas or Propane (LPG)
- Energy Consumption Control
- Domestic Hot Water (DHW)

The Rheem Commpak is a fully engineered system; completely factory assembled & tested. Requiring only minimal on-site works to be completed as detailed below:

1. Installation of the package & following service connections.

   a) Gas In b) Cold Water In c) Hot Water Out

   d) Hot Water Return (Optional) e) Co-axial Flueing for individual Internal Water Heaters

2. 240V/1Ph/50Hz Power Supply to the controller. Requires 16A Type C or D curve up front protection.
3. Remote alarm monitoring cabling to the controller (optional)
4. Final commissioning as per the simple instructions provided.

Notes: 1P = Single Pump 2P = Dual Pump
Ext = External System Int = Internal System

WATER HEATER OPERATION

Automatic safety controls are fitted to the water heater to provide safe and efficient operation.

HOW HOT SHOULD THE WATER BE?

The water heater has a maximum preset outlet temperature setting of 82°C. For applications requiring sanitising temperatures, the outlet temperature should be set at 82°C. The minimum recommended preset outlet temperature setting is 60°C.

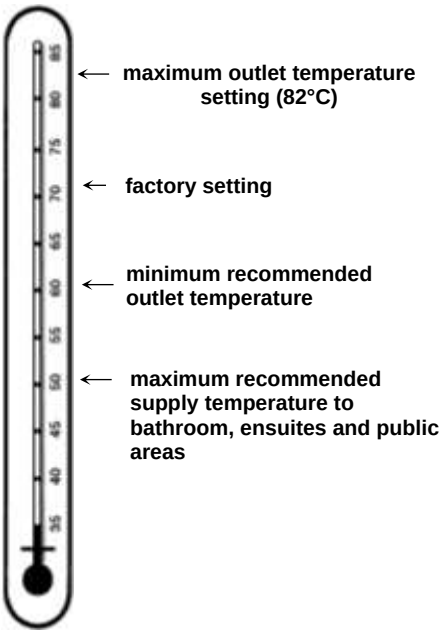

If the water heater is installed as part of a circulated hot water flow and return system in a building, the preset outlet temperature setting of the water heater must be set to at least 60°C.

Note: The preset outlet temperature setting of this water heater cannot be adjusted by the householder. The setting can only be adjusted by the installer, Rheem Service or their nearest Accredited Service Agent.

Note: AS 3498 requires that a water heater provides the means to inhibit the growth of Legionella bacteria in potable water. When this water heater is used as an in-series booster for a solar water heater it can satisfy this AS 3498 requirement provided it is energised and the booster preset outlet temperature setting is 70°C or higher.

If this water heater is installed as part of a solar water heater system, the system can deliver water at temperatures from 58°C up to 75°C and possibly higher depending upon the model of solar water heater installed.

HOTTER WATER INCREASES THE RISK OF SCALD INJURY

This water heater can deliver water at temperatures which can cause scalding.

We recommend and it may be required by regulations that an approved temperature limiting device be fitted into the hot water piping to ablution, bathing and public areas when a Commpak water heater is installed. This will keep the water temperature below the maximum permitted by AS/NZS 3500.4 to these areas.

The water heater uses 240 Volt AC electrical power for operation of the control systems and the combustion fan. The removal of the front panel will expose 240 V wiring. It must only be removed by a qualified person.

The power lead from the water heater must be plugged into a weatherproof electrical outlet. Take care not to touch the power plug with wet hands.

SAFETY

This water heater is supplied with temperature sensors, a FlameSafe® protection system and a pressure relief valve. These devices must not be tampered with or removed. The water heater must not be operated unless each of these devices is fitted and is in working order.

If the power supply cord or plug is damaged, it must be replaced by a qualified person in order to avoid a hazard. The power supply cord and plug must be replaced with a genuine replacement part available from Rheem. Phone Rheem Service or their nearest Accredited Service Agent to arrange for an inspection.

⚠ **Warning:** For continued safety of this water heater it must be installed, operated and maintained in accordance with the Owner's Guide and Installation Instructions.

The Rheem warranty may not cover faults if relief valves or other safety devices are tampered with or if the installation is not in accordance with these instructions.

PRECAUTIONS

Where damage to property can occur in the event of the water heater leaking, the water heater must be installed over a safe tray. Construction, installation and draining of a safe tray must comply with AS/NZS 3500.4 and all local codes and regulatory authority requirements.

The water heater must be maintained in accordance with the Owner's Guide and Installation Instructions. Refer to "General Maintenance" on page **11**, "Minor Six Month Maintenance" on page **11** and "Annual Service" on page **11**.

If this water heater is to be used where an uninterrupted hot water supply is necessary for your application or business you should ensure that you have back up redundancy within the hot water system design. This should ensure the continuity of hot water supply in the event that this water heater were to become inoperable for any reason. We recommend you seek advice from your plumber or specifier about your needs and building back up redundancy into your hot water supply system.

GENERAL MAINTENANCE

The jacket of the water heater can be cleaned with a soft cloth and warm mild soapy water. Under no circumstances should abrasive materials or powders be used.

The area around the water heater can be sprayed with insecticide to rid the area of insects. Insects encroaching into or nesting in the water heater can interfere with the operation of the water heater and also damage components.

MINOR SIX MONTH MAINTENANCE

It is recommended minor maintenance be performed every six months by the dwelling occupant.

The minor maintenance includes:

- Inspect around the air inlet, flue terminal and the water heater in general for plant growth.
  - Trim back any shrubs, bushes or other plants which have encroached around the water heater.

    Plant growth across the air let and flue terminal can interfere with the performance of the water heater.
- Inspect around the water heater for insect infestations, such as ants.
  - Spray insecticide around the water heater if necessary to rid the area of insects. Do not spray the surface or into the air inlet or flue terminal of the water heater.

    Insects encroaching into or nesting in the water heater can interfere with the operation of the water heater and also damage components.
- Check the drain line from the safe tray (if one is installed) is not blocked.
- Check and clean line strainers on the cold water inlet and hot water return.
- Check and clean filter on CFWH cold water inlet.

ANNUAL SERVICE

For safe and efficient operation, it is recommended an annual service be conducted on the water heater. Only genuine replacement parts should be used on this water heater.

Warning: Servicing of a water heater must only be carried out by qualified personnel. Phone Rheem Service or their nearest Accredited Service Agent.

The annual service includes the following actions:

- Check and if necessary adjust the gas pressure.
- Check the operation of and clean the burner.
- Visually check the unit for any potential problems.
- Inspect all connections.
- Check the drain line from the safe tray (if one is installed) is not blocked.
- Check and clean line strainers on the cold water inlet and hot water return.
- Check and clean filter on CFWH cold water inlet.

TO TURN OFF THE WATER HEATER

If it is necessary to turn off the water heater:

- Switch off the electrical supply at the circuit breaker isolating switch to the water heater if there is no risk of freezing conditions occurring (refer to note below).
- Close the gas isolation valve at the inlet to the water heater.
- Close the cold water isolation valve at the inlet to the water heater.
- Close the hot water return isolation valve.

Note: If there is a risk of freezing conditions, the electrical supply to the water heater should not be switched off unless the water heater is drained, otherwise damage could result (refer to "Frost Protection" on page **12** and "Draining the Water Heater" on **page 12**).

TO TURN ON THE WATER HEATER

- Screw in the drain plugs at the cold water inlet and hot water outlet of the CFWH if they have been drained.
- Open all of the hot taps. (don't forget the shower).
- Open the cold water isolation valve fully at the inlet to the water heater.

  Air will be forced out of the taps.
- Close each tap as water flows freely from it.
- Open the gas isolation valve fully at the inlet to the water heater.
- Switch on the electrical supply at the circuit breaker isolating switch.
- The water heater will operate automatically.

FROST PROTECTION

The water heater has a frost protection system. The frost protection system will protect the water heater from damage, by preventing ice forming in the waterways of the water heater, in the event of freezing conditions occurring.

Notes:

- The frost protection system will be rendered inoperable if electrical power is not available at the water heater. Damage caused by freezing due to the unavailability of power at the water heater is not covered by the Rheem warranty (refer to "Terms of the Rheem Warranty" on **page 4**).
- If it is necessary to switch the power off to the water heater and there is a risk of freezing, then it is necessary to drain the water heater (refer to "Draining the Water Heater" on page 12).
- The water heater is not suitable for installation in areas where the ambient temperature falls below -20°C (including wind chill factor).

DRAINING THE WATER HEATER

To drain the water heater:

- Turn off the water heater (refer to "Turn Off The Water Heater" on page **12**).
- Open the pressure relief valve on the Commpak located on the hot manifold.
- Unscrew the two drain plugs, one each at the cold water inlet and hot water outlet, on the underside of continuous flow water heater.

  Water will drain from the water heaters.
- When water stops flowing from the water heaters, close the pressure relief valve.

Note: It is recommended not to screw the drain plugs back in, until the water heater is to be turned on again.

HOW DO I KNOW IF THE WATER HEATER IS INSTALLED CORRECTLY?

Installation requirements are shown on pages **23** to **26** The water heater must be installed:

- by a qualified person, and
- in accordance with the installation instructions, and
- in compliance with Standards AS/NZS 3500.4, AS/NZS 5601.1, as applicable under local regulations, and all local codes and regulatory authority requirements.

DOES THE WATER CHEMISTRY AFFECT THE WATER HEATER?

The water heater is suitable for most public water supplies, however some water chemistries may have detrimental effects on the water heater, its components and fittings. Refer to "Water Supplies" on page **14**.

If you are in a known harsh water area or you are not sure of your water chemistry, have your water checked against the conditions described on page **14**.

HOW LONG WILL THE WATER HEATER LAST?

The water heater is supported by a manufacturer's warranty (refer to page **6**). There are a number of factors that will affect the length of service the water heater will provide. These include but are not limited to the water chemistry, the water pressure, the water temperature (inlet and outlet) and the water usage pattern. Refer to "Precautions" on page **11**.

WATER SUPPLIES

This water heater must be installed in accordance with this advice to be covered by the Rheem warranty.

This water heater is manufactured to suit the water conditions of most public reticulated water supplies. However, there are some known water chemistries which can have detrimental effects on the water heater and its operation and / or life expectancy. If you are unsure of your water chemistry, you may be able to obtain information from your local water supply authority. This water heater should only be connected to a water supply which complies with these guidelines for the Rheem warranty to apply.

CHANGE OF WATER SUPPLY
The changing or alternating from one water supply to another can have a detrimental effect on the operation and / or life expectation of a heat exchanger in a continuous flow water heater.

Where there is a changeover from one water supply to another, e.g., a rainwater tank supply, bore water supply, desalinated water supply, public reticulated water supply or water brought in from another supply, then water chemistry information should be sought from the supplier or it should be tested to ensure the water supply meets the requirements given in these guidelines for the Rheem warranty to apply.

SATURATION INDEX
The saturation index (SI) is used as a measure of the water's corrosive or scaling properties.

In a corrosive water supply, the water can attack copper parts and cause them to fail. Where the saturation index is less than –1.0, the water is very corrosive and the Rheem warranty does not apply to a copper heat exchanger in a continuous flow water heater or Commpak pipe work.

In a scaling water supply calcium carbonate is deposited out of the water onto any hot metallic surface. Where the saturation index exceeds +0.80, the Rheem warranty does not apply to a copper heat exchanger in a continuous flow water heater Commpak pipe work.

Water which is scaling may be treated with a water softening device to reduce the saturation index of the water.

Refer to the Saturation Index chart on page **14**.

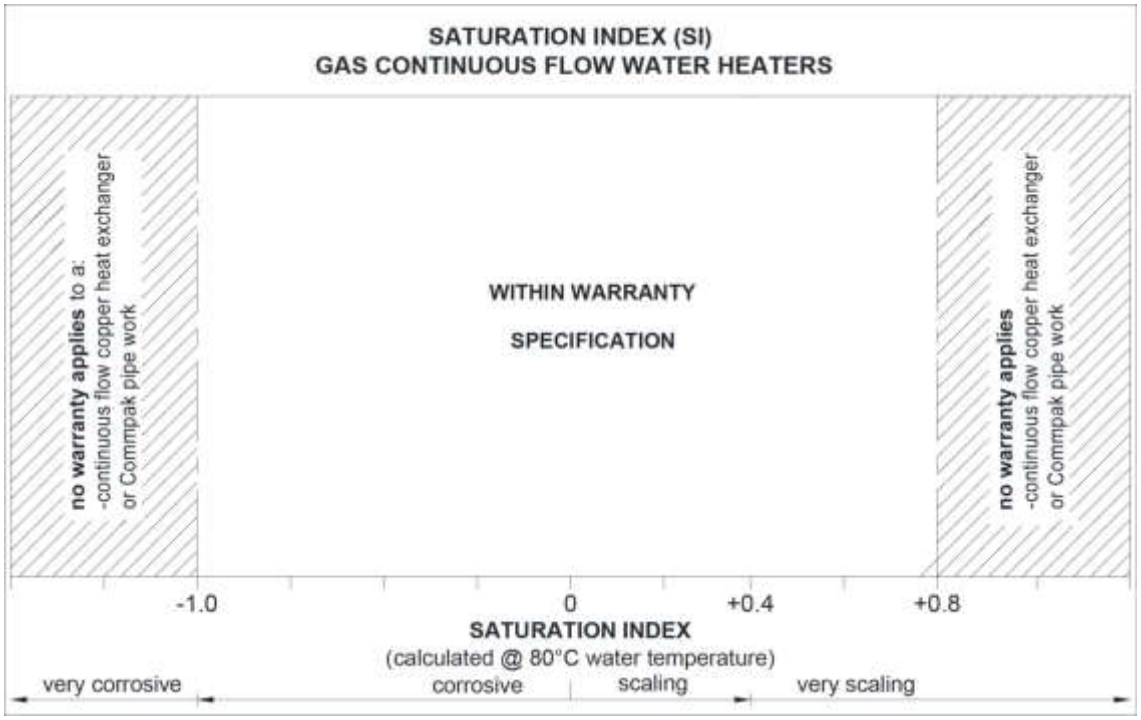

SAVE A SERVICE CALL

Check the items below before making a service call. You will be charged for attending to any condition or fault, which is not related to manufacture or failure of a part (refer to "Terms of the Rheem Warranty" on page **4**).

COLD WATER FROM THE HOT TAP

- Is the continuous flow water heater plugged in and is the power at the isolating switch on?
- Is power available in the premises?

  Try using another electrical appliance.
- Is the isolation valve in the gas line open?
- Is there a gas supply to the rest of the premises?

  Try lighting another gas appliance.
- Has the gas line been purged of air after installation?

  Refer to your plumber.

WATER IS TOO HOT OR NOT HOT ENOUGH

- Is the preset outlet temperature of the water heater higher than required?

NO WATER FROM THE HOT TAP

No flow of water from the hot tap may indicate a restriction in or failure of the cold water supply to the water heater. Check for water flow at other taps and that the cold water isolation valve is fully open.

WATER TEMPERATURE FLUCTUATES

The Commpak is supplied with a water flow compensating device which will activate if the maximum water flow capability of the system is exceeded. This will maintain pressure and flow within the system at the expense of temperature. Temperature fluctuation can also be evident if the Commpak has been installed as an in-series booster to a solar water heater.

FAN CONTINUES TO RUN AFTER WATER HEATER OPERATION STOPS

It is the normal operation of the water heater for the fan to continue running after heating of the water is finished. The fan may run for up to six minutes after the burners extinguish, to prepare for the next ignition.

CLOUDS OF WHITE 'VAPOUR' FROM THE FLUE TERMINAL

During the heating cycle, it is not unusual to see water vapour clouds steaming from the flue terminal, particularly on cold days. This is normal operation of the water heater.

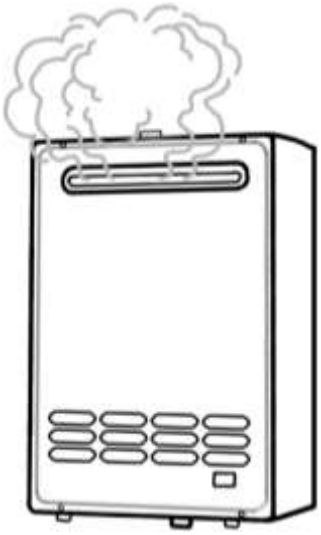

PRESSURE RELIEF VALVE DISCHARGING

A pressure relief valve is incorporated into the water heater controls and the Commpak manifold. These valves protect the water heater, by allowing water to escape, in the event of excessive pressure build up in the waterways.

- **Normal operation**
  A small volume of water may discharge from the bottom of the water heater when a hot tap is suddenly closed.
- **Continuous dribble**
  A continuous dribble may indicate the water supply pressure is above the design pressure for the water heater. If so, a pressure limiting valve must be installed on the cold water supply pipe to the water heater (refer to "Mains Water Supply" on page **25**).

ERROR CODE

The water heater provides a diagnostic error code in the event of an interruption to its operation. The error code is displayed on the OK MONITOR on the front of the water heater as a numerical value. If an error code appears:

- Close the isolation valve at the outlet of the CFWH and unplug the electrical supply to the CFWH.
- Check the gas isolation valve at the gas inlet to the CFWH is fully open.
- Wait 5 minutes, then plug in the electrical supply to the water heater, and open the isolating valve.

If the error code persists, take note of the numerical code and isolate the CFWH. Phone Rheem Service or their nearest Accredited Service Agent to arrange for inspection.

IF YOU HAVE CHECKED ALL THE FOREGOING AND STILL BELIEVE YOU NEED ASSISTANCE, PHONE RHEEM SERVICE OR THEIR NEAREST ACCREDITED SERVICE AGENT.

COMMPAK – TECHNICAL SPECIFICATIONS

DESIGN BASIS
One or two water regulation pumps maintain the hot water supply at mains pressure over the Commpak's design capacity. Pumps are plumbed to the water inlet of the continuous flow water heaters (CFWH) to overcome friction losses inherent within the CFWH. Pumps to provide (if required) an adjustable flow rate for the circulation of water throughout the heated water reticulation system, so as to maintain a consistency of temperature and pressure throughout.

A flow compensation device has also been provided to cater for flow rates exceeding the heated water systems designed capability. This device has been installed between the cold water inlet & hot water outlet of the system to automatically provide additional water flow to maintain system pressure during excessive peak demands.

A pressure responsive differential bypass valve has also been provided to facilitate for an adjustable recirculation flow rate regulation means. This facility also provides for an internal recirculation means to ensure sufficient flow is always maintained through the CFWH for firing and continuous operation. This feature is especially useful for dead leg (no return) hot water applications.

UNIQUE FEATURES

- Automatic operation of the water regulation pump/s for both primary & secondary water reticulation
- Heated water within the reticulation system is supplied at mains water pressure with automatic compensation to cater for flow demands in excess of design requisites
- Separate circulating pump/s no longer required
- Hot water storage vessel(s) no longer required
- Capital & operating cost savings
- Smaller space requirements

CONTINUOUS FLOW WATER HEATER(S) (CFWH)
Required numbers are assembled in parallel & hydraulically balanced. 100% duty achieved by parallel operation on demand.

WATER REGULATION PUMP/S
Refer to pages 63 to 69 for full details.

- Pump wetted parts suitable for potable water application.
- Continuous rated to handle hot water up to 110°C.
- 1000 KPa Operating Pressure.
- 240V/1PH/50Hz Continuous rated IPX4D motor with three speed settings & wired to the controller.
- Pump/s integrated in to the hot water system with isolation / check valves & required plumbing / fittings.
- loss of water supply pressure switch mounted & wired to the controller. Pressure switch able to be tested in situation without isolating water supply to the Hot water System.
- UV Stabilized weather cover for pump provided for external installation applications only.

PLUMBING & HOT WATER PIPING INSULATION

- Complete cold water & hot water piping; valves & fittings all in accordance with AS/NZS3500.4:2003
- Hot Water Piping Insulation details:

- Closed cell PE foam clad with a reinforced UV resistant foil facing, suitable for outdoor usage
- Operating temperature to 105ºC
- Rated 'R' Value of 1.0 or greater
- Compliance In accordance to AS/NZS3500.4:2003, Amendment 1: 2005; Section 8.2.1 (Piping for Water Heaters) to all climate regions & external locations

- Complete natural gas piping; valves & fitting as in accordance with AS/NZS 5601.1

SKID PACKAGE

- All water heaters, pump/s, plumbing manifolds & controller mounted on a common base
- Package is factory tested & ready for on site installation

SYSTEM CONTROLLER:
Refer to **pages 72** to **77** for full details.

COMMPAK – MODELS AVAILABLE & TECHNICAL DATA

Commpak Model		CPE02 & CPI02		CPE03 & CPI03		CPE04 & CPI04		CPE05 & CPI05		CPE06 & CPI06	
Input	MJ/hr	410		615		820		1025		1230	
Installation		Outdoor or Indoor – Refer to Model Type									
Recovery Rate @ 50°C rise 25°C rise	L/hr	 1645 3290		 2470 4940		 3290 6580		 4115 8230		 4935 9870	
Peak Flow Rate @ 50°C rise 25°C rise	L/min	 26.4 52.8		 39.6 79.2		 52.8 105.6		 66.0 132.0		 79.2 158.4	
Dimensions Height (Ext / Int) Width Depth (Wall / Floor Mount) Front Clearance (Ext / Int)	 mm mm mm mm	 1815 / 1860 1400 350/500 800 / 600		 1815 / 1860 1400 350/500 800 / 600		 1815 / 1860 1780 500 800 / 600		 1815 / 1860 2100 500 800 / 600		 1815 / 1860 2500 500 800 / 600	
Cold Water	BSPF	40mm									
Hot Water	BSPF	40mm									
Return	BSPF	25mm									
Gas	BSPTM	40mm									
Approx Weight	N x pumps	1P	2P	1P	2P	1P	2P	1P	2P	1P	2P
Back to Back	kg	120	130	150	160	220	230	245	255	270	280
Standby Pump		optional		optional		optional		optional		optional	
Water Supply Pressure		800kPa Maximum & 150kPa Minimum									
Gas Supply Pressure											
Natural	kPa	1.13 Minimum & 3.5 Maximum									
Propane	kPa	2.75 Minimum & 3.5 Maximum									
Power Supply 240V/50Hz	N x pumps	1P	2P	1P	2P	1P	2P	1P	2P	1P	2P
	FL Amps	3.62	5.24	4.62	6.24	5.62	7.24	6.62	8.24	7.62	9.24

COMMPAK INTERNAL SINGLE PUMP – GENERAL ARRANGEMENT

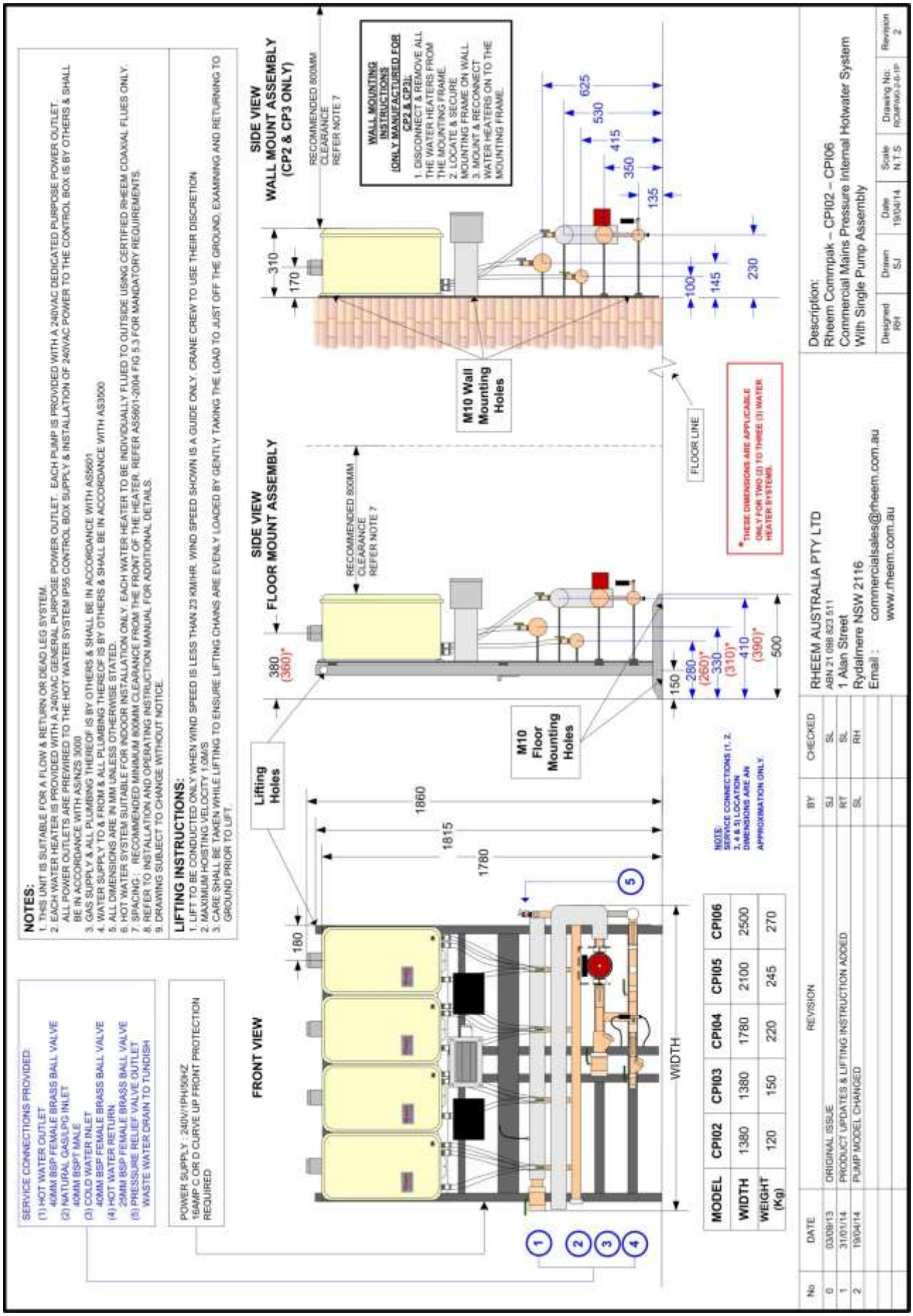

COMMPAK INTERNAL DUAL PUMPS – GENERAL ARRANGEMENT

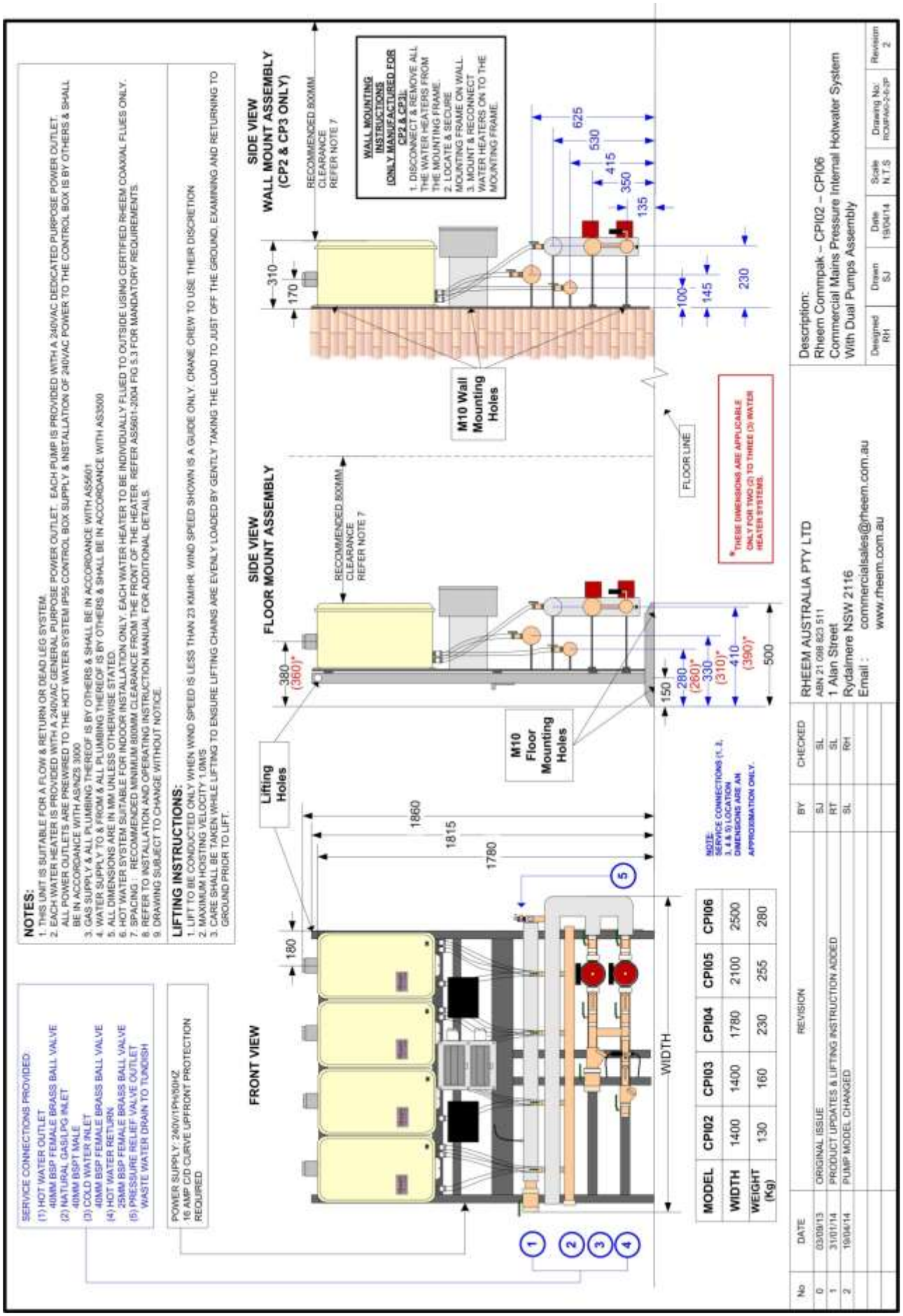
NOTES:
1. THIS UNIT IS SUITABLE FOR A FLOW & RETURN OR DEAD LEG SYSTEM.
2. EACH WATER HEATER IS PROVIDED WITH A 240VAC GENERAL PURPOSE POWER OUTLET. EACH PUMP IS PROVIDED WITH A 240VAC DEDICATED PURPOSE POWER OUTLET. ALL POWER OUTLETS ARE PREWIRED TO THE HOT WATER SYSTEM IP55 CONTROL BOX SUPPLY & INSTALLATION OF 240VAC POWER TO THE CONTROL BOX IS BY OTHERS & SHALL BE IN ACCORDANCE WITH AS/NZS 3000
3. GAS SUPPLY & ALL PLUMBING THEREOF IS BY OTHERS & SHALL BE IN ACCORDANCE WITH AS5601
4. WATER SUPPLY TO & FROM & ALL PLUMBING THEREOF IS BY OTHERS & SHALL BE IN ACCORDANCE WITH AS3500
5. ALL DIMENSIONS ARE IN MM UNLESS OTHERWISE STATED.
6. HOT WATER SYSTEM SUITABLE FOR INDOOR INSTALLATION ONLY. EACH WATER HEATER TO BE INDIVIDUALLY FLUED TO OUTSIDE USING CERTIFIED RHEEM COAXIAL FLUES ONLY.
7. SPACING : RECOMMENDED MINIMUM 800MM CLEARANCE FROM THE FRONT OF THE HEATER. REFER AS5601-2004 FIG 5.3 FOR MANDATORY REQUIREMENTS.
8. REFER TO INSTALLATION AND OPERATING INSTRUCTION MANUAL FOR ADDITIONAL DETAILS.
9. DRAWING SUBJECT TO CHANGE WITHOUT NOTICE.
LIFTING INSTRUCTIONS:
1. LIFT TO BE CONDUCTED ONLY WHEN WIND SPEED IS LESS THAN 23 KM/HR. WIND SPEED SHOWN IS A GUIDE ONLY. CRANE CREW TO USE THEIR DISCRETION
2. MAXIMUM HOISTING VELOCITY 1.0M/S
3. CARE SHALL BE TAKEN WHILE LIFTING TO ENSURE LIFTING CHAINS ARE EVENLY LOADED BY GENTLY TAKING THE LOAD TO JUST OFF THE GROUND, EXAMINING AND RETURNING TO GROUND PRIOR TO LIFT.
SERVICE CONNECTIONS PROVIDED
(1) HOT WATER OUTLET 40MM BSP FEMALE BRASS BALL VALVE
(2) NATURAL GAS/LPG INLET 40MM BSPT MALE
(3) COLD WATER INLET 40MM BSP FEMALE BRASS BALL VALVE
(4) HOT WATER RETURN 25MM BSP FEMALE BRASS BALL VALVE
(5) PRESSURE RELIEF VALVE OUTLET WASTE WATER DRAIN TO TUNDISH
POWER SUPPLY: 240V/1Ph/50HZ. 16 AMP C/D CURVE UPFRONT PROTECTION REQUIRED
FRONT VIEW
SIDE VIEW FLOOR MOUNT ASSEMBLY
SIDE VIEW WALL MOUNT ASSEMBLY (CP2 & CP3 ONLY)
RECOMMENDED 800MM CLEARANCE REFER NOTE 7
Lifting Holes
M10 Floor Mounting Holes
M10 Wall Mounting Holes
FLOOR LINE
WALL MOUNTING INSTRUCTIONS (ONLY MANUFACTURED FOR CP2 & CP3):
1. DISCONNECT & REMOVE ALL THE WATER HEATERS FROM THE MOUNTING FRAME.
2. LOCATE & SECURE MOUNTING FRAME ON WALL.
3. MOUNT & RECONNECT WATER HEATERS ON TO THE MOUNTING FRAME.
*THESE DIMENSIONS ARE APPLICABLE ONLY FOR TWO (2) TO THREE (3) WATER HEATER SYSTEMS.
NOTE: SERVICE CONNECTIONS (1, 2, 3, 4 & 5) LOCATION DIMENSIONS ARE AN APPROXIMATION ONLY.
WIDTH
MODEL | CPI02 | CPI03 | CPI04 | CPI05 | CPI06
WIDTH | 1400 | 1400 | 1780 | 2100 | 2500
WEIGHT (Kg) | 130 | 160 | 230 | 255 | 280
No | DATE | REVISION | BY | CHECKED
0 | 03/09/13 | ORIGINAL ISSUE | SJ | SL
1 | 31/01/14 | PRODUCT UPDATES & LIFTING INSTRUCTION ADDED | RT | SL
2 | 19/04/14 | PUMP MODEL CHANGED | SL | RH
RHEEM AUSTRALIA PTY LTD
ABN 21 098 823 511
1 Alan Street
Rydalmere NSW 2116
Email : commercialsales@rheem.com.au
www.rheem.com.au
Description:
Rheem Commpak – CPI02 – CPI06
Commercial Mains Pressure Internal Hotwater System
With Dual Pumps Assembly
Designed RH
Drawn SJ
Date 19/04/14
Scale N.T.S
Drawing No: RCI/PM/-2-6-3P
Revision 2

COMMPAK EXTERNAL SINGLE PUMP – GENERAL ARRANGEMENT

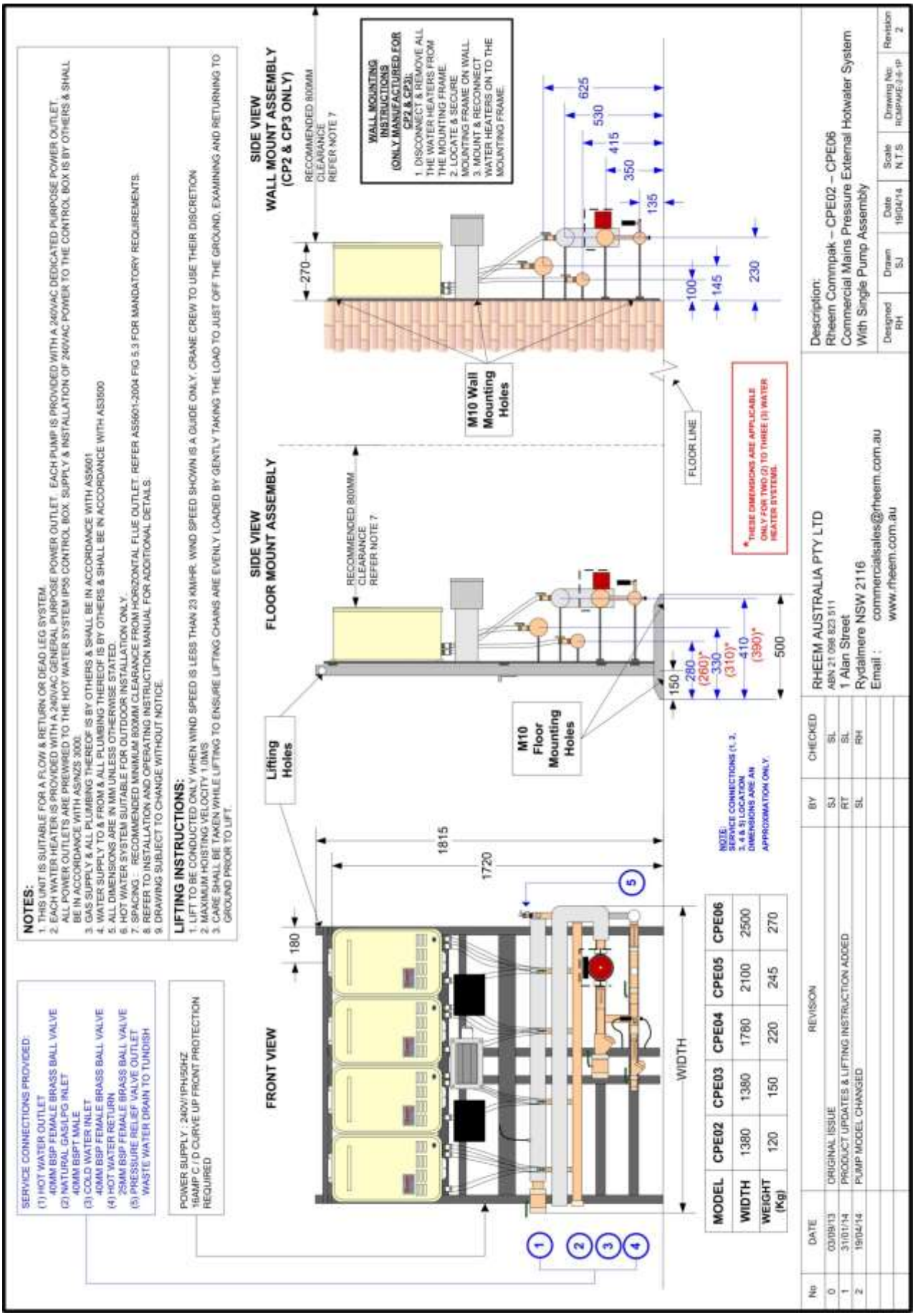

COMMPAK EXTERNAL SINGLE PUMP – GENERAL ARRANGEMENT

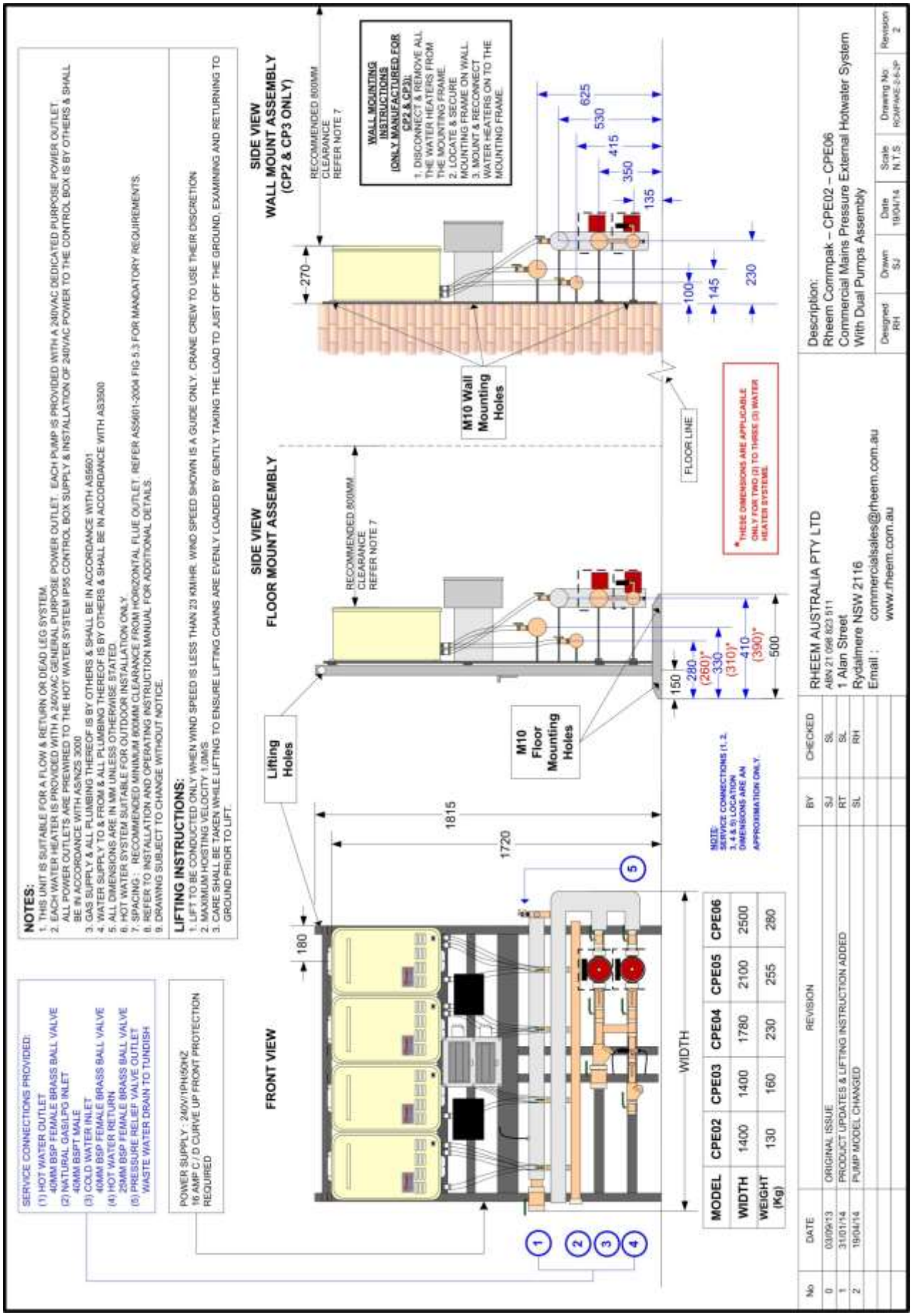

INSTALLATION – WATER HEATER

THIS WATER HEATER IS FOR OUTDOOR OR INDOOR INSTALLATION, MODEL DEPENDANT.
THIS WATER HEATER IS NOT SUITABLE FOR POOL HEATING.
Check the water heater is suitable for the gas type available.
(refer to the rating label on the water heater)

INSTALLATION STANDARDS
The water heater must be installed:

- by a qualified person, and
- in accordance with the installation instructions, and
- in compliance with the Plumbing Code of Australia (PCA), Standards AS/NZS 3500.4 and AS/NZS 5601.1, and all local codes and regulatory authority requirements, and
- in New Zealand also conforming to Clauses G11, G12 and H1 of the New Zealand Building Code.

All packaging materials must be removed from the water heater prior to its installation.

WATER HEATER APPLICATION
This water heater is designed for the purpose of heating potable water. Its use in an application other than this may shorten its life.

If this water heater is to be used where an uninterrupted hot water supply is necessary for the application or business, then there should be redundancy within the hot water system design. This should ensure the continuity of hot water supply in the event that this water heater was to become inoperable for any reason. We recommend you provide advice to the system owner about their needs and building backup redundancy into the hot water supply system.

Note: AS 3498 requires that a water heater provides the means to inhibit the growth of Legionella bacteria in potable water. When this water heater is used as an in-series booster for a solar water heater it can satisfy this AS 3498 requirement provided it is energised and the booster preset outlet temperature setting is 70°C or higher.

WATER HEATER LOCATION
The water heater should be installed in a position chosen with safety and service in mind. If this water heater is part of a solar water heater system, it should also be installed close to the solar storage tank. Make sure people (particularly children) will not touch the flue terminal. The flue terminal and air inlet must be clear of obstructions and shrubbery.

Clearance must be allowed for servicing of the water heater. The water heater must be accessible without the use of a ladder or scaffold. Make sure the entire front panel can be removed for service. You must be able to read the information on the rating plate. Remember you may have to remove a water heater later for servicing.

The water must be installed vertically upright. Commpak can be mounted in any location on a solid base. The frame must be secured to the floor at all anchor points provided.

The water heater must not be installed in an area with a corrosive atmosphere where chemicals are stored or where aerosol propellants are released. Remember the air may be safe to breathe, but when it goes through a flame, chemical changes take place which may attack the water heater.

OUTDOOR INSTALLATION

If outdoors a secondary flue is not required. The water heater must not be installed indoors or in a confined space.

The water heater must be located to ensure that the location of the flue terminal complies with the requirements of AS/NZS 5601.1, as applicable under local regulations. The distances are measured along the wall behind the water heater.

- At least 300 mm between the top of the flue terminal and the eaves.
- At least 500 mm between the flue terminal and the edge of any opening into the building, such as an openable door or window, measured horizontally*.
- At least 1500 mm between the top of the flue terminal and the edge of any opening into the building, such as an openable window, measured vertically.
- At least 300 mm between the flue terminal and a return wall or external corner, measured horizontally*.
- At least 1500 mm between the flue terminal and any opening into a building, in the direction of the flue discharge.

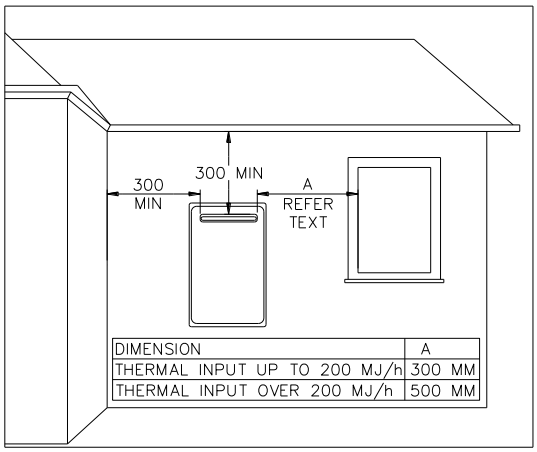

- At least 500 mm between the flue terminal and a fence, wall or other obstruction, in the direction of the flue discharge.

Note: * If these horizontal distances cannot be achieved, AS/NZS 5601.1 states an equivalent horizontal distance measured diagonally from the nearest discharge point of the flue terminal to the opening may be deemed to comply. Check with the local regulator.

Note: Two or more of this model CFWH can be installed side by side with minimal clearance between them. The AGA has approved the installation of two or more of this model CFWH with an exemption from the 300 mm minimum clearance requirements between flue terminals, as stated in AS/NZS 5601.1, clause 6.9.3.

INDOOR INSTALLATION

VENTILATION
This water heater is to be installed with a Rheem coaxial flue system. The kit enables a room sealed installation, drawing air for combustion from outside of the building.

The ventilation of a room or an enclosure such as a cupboard, where the water heater is installed must comply with the requirements of AS/NZS 5601.1, as applicable under local regulations.

SECONDARY FLUE
A secondary flue must be installed with an indoor water heater to discharge combustion products to outside the building. The water heater **MUST ONLY** be installed with a certified Rheem coaxial flue system.

Where more than one water heater is installed, each water heater must be individually flued using a certified Rheem coaxial flue system. A common flue system **MUST NOT** be used.
Refer to the CFWH Owner's Manual for details of flue installation.

SAFE TRAY
Where damage to property can occur in the event of the water heater leaking, the water heater must be installed over a safe tray. Construction, installation and draining of a safe tray must comply with AS/NZS 3500.4 and all local codes and regulatory authority requirements.

FROST PROTECTION
The water heater has a frost protection system. The frost protection system will protect the water heater from damage, by preventing ice forming in the waterways of the water heater, in the event of freezing conditions occurring.

The frost protection system will be rendered inoperable if electrical power is not available at the water heater. Damage to the water heater caused by freezing of the pipe work to or from the water heater is not covered under the Rheem warranty. Refer to AS/NZS 3500.4 for precautions to be taken for installations in frost prone areas. The water heater is not suitable for installation in areas where the ambient temperature falls below -20°C (including wind chill factor).

MAINS WATER SUPPLY

Where the mains water supply pressure exceeds that shown in the table below, an approved pressure limiting valve is required and should be fitted.

Relief valve setting	1000 kPa
Max. mains supply pressure	800 kPa
Min. mains supply pressure *	150 kPa

* minimum water supply pressure required to achieve the rated flow and performance

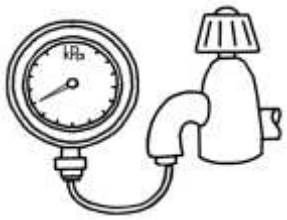

Notes:

- It is not recommended to install this water heater with a low pressure water supply.
- A minimum water supply pressure of 150 kPa is required to achieve the rated flow and performance of the water heater.
- If this water heater is installed as an in-series gas booster for a solar water heater, the maximum water supply pressure to the solar water heater, without an expansion control valve (ECV), is generally 800 kPa, however it may be less than this for some models. Refer to the Owner's Guide and Installation Instructions supplied with the solar water heater for maximum mains supply pressure details.
- This water heater is not suitable for connection to bore water or spring water unless a water treatment device is fitted.
- Refer to "Water Supplies" on page **14** for further information on water chemistry.

PRESET OUTLET TEMPERATURE SETTING

The factory preset outlet temperature setting of the water heater is:

- 70°C as part of a Commpak system

It is usually not necessary to check or adjust the factory preset outlet temperature setting of the water heater, unless the customer or application has a particular requirement for this to be done.

For applications requiring sanitising temperatures, such as a commercial kitchen, it will be necessary to adjust the preset outlet temperature setting of the CFWH and the controller to achieve and maintain sanitising temperatures up to 82°C. Refer to page 56 for details.

If the water heater is installed as part of a circulated hot water flow and return system in a building, the preset outlet temperature setting must be set to at least 60°C. If the water temperature decreases by more than 5°C through a circulated hot water flow and return system due to heat loss in the ring main, the preset outlet temperature setting of the water heater should be set to at least 65°C.

GAS BOOSTER FOR A SOLAR WATER HEATER

Note: AS 3498 requires that a water heater provides the means to inhibit the growth of Legionella bacteria in potable water. When this water heater is used as an in-series booster for a solar water heater it can satisfy this AS 3498 requirement provided it is energised and the booster preset outlet temperature setting is 70°C or higher.

HOT WATER DELIVERY
This water heater can deliver water at temperatures which can cause scalding.

It is necessary and we recommend that a temperature limiting device be fitted into the hot water piping to any ablution and public areas such as a bathroom, ensuite or public amenities when a Commpak water heater is installed to reduce the risk of scalding. The installing plumber may have a legal obligation to ensure the installation of this water heater meets the delivery water temperature requirements of AS/NZS 3500.4 so that scalding water temperatures are not delivered to a bathroom, ensuite or other ablution or public area.

The temperature limiting device used with a continuous flow gas water heater should have:

- a specified ‘minimum temperature differential’ between the hot water inlet and the tempered water outlet of no greater than 10°C, and
- a specified ‘maximum permitted pressure variation’ in the supply between the hot water inlet and the cold water inlet of no less than 15%.

Refer to the specifications of the tempering valve.

TEMPERATURE LIMITING DEVICE
A temperature limiting device cannot be installed in circulated hot water flow and return pipe work, unless it is specifically designed to do so, such as the Rheem Guardian warm water system. The tempered water from a temperature limiting device cannot be circulated. Where a circulated hot water flow and return system is required in a building, a temperature limiting device can only be installed on a dead leg, branching off the circulated hot water flow and return pipe.

If circulated tempered water were to be returned back to the water heater, depending on the location of the return line connection on the water supply line to the water heater, then either:

- water will be supplied to the cold water inlet of the temperature limiting device at a temperature exceeding the maximum recommended water supply temperature, or
- when the hot taps are closed no water will be supplied to the cold water inlet of the temperature limiting device whilst hot water will continue to be supplied to the hot water inlet of the temperature limiting device.

These conditions may result in either water at a temperature exceeding the requirements of AS/NZS 3500.4 being delivered to the hot water outlets in the ablution areas, or the device closing completely and not delivering water at all, or the device failing. Under either condition, the operation and performance of the device cannot be guaranteed.

CONNECTIONS - PLUMBING

SITE LOCATION

- External Systems - Recommended 800mm access clearance from horizontal flue outlets
- Internal Systems - Recommended 600mm access clearance.
- Refer: Australian Standard Gas Installations AS/NZS 5601.1 for further requirements.
- Secure to wall or secure to the floor as appropriate.
- Consult with site structural engineer for any specific securing requirements.
- Connect both cold water & hot water piping / valves and fittings as per the requirements of AS3500.4
- Water Supply Pressure: 150kPa Minimum to 800kPa Maximum with acceptable pressure fluctuations (±50kPa).
- Connect natural gas piping / valves & fitting as per the requirements of AS/NZS 5601.1
- Natural gas working pressure 1.13 kPa minimum to 2.75 kPa maximum
- Propane working pressure 2.75 kPa minimum - 3.5 kPa maximum
- A secondary flue must be installed with an indoor water heater to discharge combustion products to outside the building. Each water heater must be individually flued using a Rheem approved coaxial flue system. A common flue system MUST NOT be used.
- Refer to the Owner's guide and installation instructions supplied for the 862 series 027 indoor CFWH, model for further details

PIPE SIZES

The pipe sizing for hot water supply systems should be carried out by persons competent to do so, choosing the most suitable pipe size to ensure adequate flow for each individual application. Reference to the technical specifications of the water heater and local regulatory authority requirements must be made.

To achieve true mains pressure operation, the cold water line to the water heater should be the same size or bigger than the hot water line from the water heater.

IN-SERIES BOOSTER

The pipe work between the solar storage tank (if one is installed) and the in-series gas booster, **MUST BE** of copper and be fully insulated with a closed cell type insulation or equivalent in accordance with the requirements of AS/NZS 3500.4.

The insulation must be weatherproof and UV resistant if exposed. The insulation must be fitted up to the connections on the solar storage tank

GAS INLET

The gas connection is made on the left hand side of the water heater. The pipe work must be cleared of foreign matter before connection and purged before attempting to operate the water heater. An isolation valve and disconnection union must be installed to allow servicing and removal of the water heater.

Note: Refer to the Gas Installations Standard AS/NZS 5601.1 for the correct method of sizing the gas supply pipe to the water heater. The pipe size selection must take into account the high gas input of this water heater as well as all of the other gas appliances in the premises.

⚠ **Warning:** Always isolate the water heater before pressure testing the gas supply system. Disconnect the water heater after the isolation valve to prevent the risk of serious damage to the gas control. The Rheem warranty does not cover damage of any nature resulting from failure to observe this precaution. Refer to rating label for gas types and pressures.

FLUEING

SECONDARY FLUE

A secondary flue must be installed with an indoor water heater to discharge combustion products to outside the building. The water heater **MUST ONLY** be installed with certified Rheem coaxial flue components carrying the label opposite. **DO NOT** use any other type of flue parts.

Where more than one water heater is installed, each water heater must be individually flued using certified Rheem coaxial flue components.

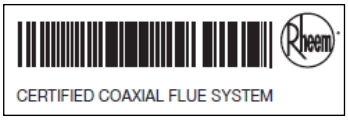

A common flue system **MUST NOT** be used.

The installation of the secondary flue must be carried out by a qualified person and be in accordance with the Gas Installations Standard AS/NZS 5601.1, as applicable under local regulations, local authority requirements and the installation instructions. A charge will be made for any service related call due to the installation of the flue system not complying with these installation instructions.

The water heater must be flued separately from all other appliances and flued to the outdoors. Minimum clearance requirements apply from the flue terminal in accordance with AS/NZS 5601.1 (refer also to "Flue Terminal Location" on page **30**). Do not install the flue to discharge into a chimney. There is no requirement on the flue to maintain a minimum distance from combustible materials.

Warning: Where the flue penetrates through walls, floors or ceilings, the penetration must comply with local regulations for fire rating. The coaxial flue system does not have nor provides a fire rating.

The water heater flue may be terminated either through the wall with a Horizontal Flue Terminal or through he roof with a 90 degree bend and a Horizontal Flue Terminal. The secondary flue must be self supporting and not impose a load on the water heater.

Flue runs must be adequately supported along both horizontal and vertical runs. The maximum recommended unsupported span for a horizontal run should be no more than 2.0 m. Support isolation hanging bands should be used. Do not use wire. Wall Brackets (PN 295129) are available and should be used for vertical runs. The coaxial flue components are to be connected together using the screws provided. The flue outside diameter is 127 mm.

Warning: Never operate the water heater unless it has been installed in accordance with the installation instructions. Failure to install the water heater in accordance with the installation instructions, properly flueing the water heater to the outdoors and ensuring it has an adequate air supply, will result in unsafe operation of the water heater, possibly causing fire, explosion, serious injury and asphyxiation from carbon monoxide.

A sealing gasket is located at one end of the inner flue. Check all flue components to ensure the gasket is in place and properly seated. **DO NOT** install if any gaskets are missing. Contact Rheem Service or their nearest Accredited Service Agent if the gasket is missing.

COMPONENTS

A complete flue system is comprised from the following components.

horizontal flue terminal (PN 295146) Flue Outlet 	**trim ring** (PN 295125)
condensate trap assy (PN AS33121006) One per system required 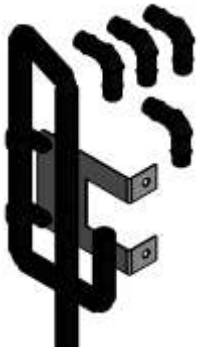	**condensate tube assy** (PN AS33121007) One per heater required
90° elbow (PN 295147) 	**45° elbow** (PN 295148)
straight length – 300 mm (PN 295152) 	**wall bracket** (PN 295129)
male to male (MM) adapter (PN 295151) 	female to female (FF) adapter (PN 295150)
adjustable straight length – 560 to 890 mm (PN 295153) 	**straight length – 900 mm** (PN 295149)

FLUE TERMINAL LOCATION

The water heater must be located to ensure that the location of the flue terminal complies with the requirements of AS/NZS 5601.1, as applicable under local regulations. As a guide the following requirements are extracted from the Gas Installations Standard. The distances are measured along the wall from the flue penetration.

Flueing Through the Wall

- At least 300 mm between the top of the flue terminal and the eaves.
- At least 300 mm between the bottom of the flue terminal and the ground, balcony or other surface.
- At 500 mm between the flue terminal and the edge of any opening into the building, such as an openable door or window, measured horizontally*.
- At least 1500 mm between the top of the flue terminal and the edge of any opening into the building, such as an openable window, measured vertically.
- At least 300 mm between the flue terminal and a return wall or external corner, measured horizontally*.
- At least 1500 mm between the flue terminal and any opening into a building, in the direction of the flue discharge.
- At least 500 mm between the flue terminal and a fence, wall or other obstruction, in the direction of the flue discharge.
- At least 300 mm between the flue terminal and any other flue terminal, cowl or other combustion air intake.

Note: * If these horizontal distances cannot be achieved, AS/NZS 5601.1 states an equivalent horizontal distance measured diagonally from the nearest discharge point of the flue terminal to the opening may be deemed to comply. Check with the local regulator.

For a multiple unit installation, refer to "Horizontal Flue Terminations" on page **43** for minimum distances between flue terminals.

Flueing Through the Roof

- At least 300 mm between the underside of the flue terminal and the nearest part of a non-trafficable roof.
- At least 1500 mm between the top of the flue terminal and the edge of any opening into the building, such as an openable window, measured vertically.
- At least 500 mm between the flue terminal and any building structure or obstruction facing the terminal, measured horizontally.
- At least 1500 mm between the flue terminal and the edge of any opening into the building, measured horizontally.
- At least 300 mm between the flue terminal and any other flue terminal, cowl or other combustion air intake.

For a multiple unit installation, refer to "Flueing Through the Roof" on page **43** for minimum distances between flue terminals.

FLUE LENGTHS

Maximum Flue Length

The system will not operate if there is excessive restriction (pressure drop) in the flueing system.

The certified flue length is 9m with a maximum of 3 x 90º elbows.

- The maximum flue length with no elbows can be 13.5m.
- Reduce the maximum length by 1.5m for every 90º elbow and by 0.75m for every 45º elbow
- The flue must be installed with a gradient of 20 mm per metre of horizontal run (1; 50 fall)

Note: Ensure the seam of the inner flue in horizontal runs is at the top of the installation.

Minimum Flue Length

The minimum horizontal flue distance which may be used is 300 mm, provided:

- One 90° Elbow is connected to the flue outlet of the water heater, and
- The Horizontal Flue Terminal is connected to the 90° Elbow.

FLUE CONDENSATE

Condensate from the combustion gases may form in the flue. The flue outlet assembly at the top of the water heater incorporates a condensate drain spigot to allow for draining of this condensate.

This spigot is covered by a rubber cap held in position by a clamp. For certain types of installations, it will be necessary to remove the clamp and cap and create connection to the condensate tube assembly. Refer to Figure 17.

The Condensate Trap must be filled with water prior to the operation of the water heater. Refer to Figure 18- Condensate Trap and Condensate Drain Line on page **33**.

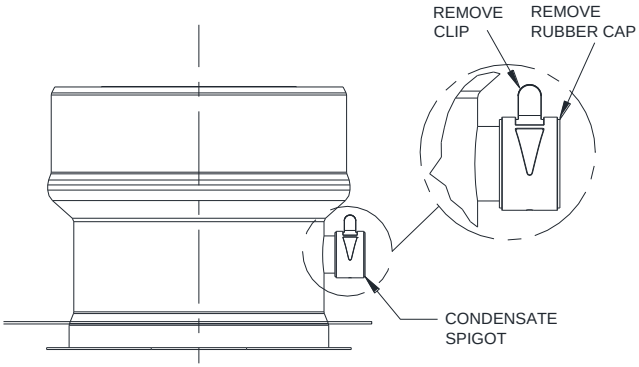

Figure 17 - Condensate Drain Spigot

DRAINING THE CONDENSATE

The connection to the condensate manifold assembly must be made under the following conditions in order to prevent condensate from draining back into the water heater:

- Where vertical sections exceeding 2 m are incorporated in a horizontally terminating flue system.
- Where the flue terminates vertically.
- Where there is a horizontal run of flue between two elbows and the elbow closest to the flue terminal is orientated upward. Refer to Figure 20- Typical Installation Horizontal Terminal with Multiple Vertical and Horizontal Sections on page **35**. This horizontal run of flue must have a gradient upward to the flue terminal. Condensate will drain back toward the water heater.

If the flue installation is outside of above conditions, the connection to the condensate manifold **MUST NOT** be made. The clamp and the rubber cap is to remain on the water heater spigot for such flue installation.

Failure to discharge build-up of condensate in flues could allow acidic flue gas condensate to enter into the water heater flue-way, causing premature failure of the water heater. Any resultant faults will not be covered by the Rheem warranty.

Note: A horizontal run of flue connecting directly to a Horizontal Flue Terminal must have a gradient downward to the flue terminal. Condensate will drain from the flue terminal.

INSTALLING MANIFOLDED CONDENSATE DRAIN

1. Refer section "DRAINING THE CONDENSATE" on page **31** to determine whether the flue system requires condensate drainage. If not required, **do not** install a manifolded condensate drain assembly.
2. Identify the number of condensate tube kits required (Rheem part number AS3312007). One (1) condensate tube kit is required for each CFWH.
3. Identify the number of condensate trap kits required (Rheem part number AS3312006). One (1) kit is required for wall mount and floor mount systems. Two (2) kits are required for back to back systems.
4. Remove the clamp and rubber cap from the condensate drain spigot on the water heater flue outlet. Ensure that each spigot is facing towards the right-hand side when facing the CFWH front cover. Discard the clamp and the rubber cap.
5. Fit the long silicone tube and aluminium tube included in the condensate tube kit between the CFWHs. Ensure the silicone tube is not kinked, twisted or pinched and ensure it is not caught on any CFWH exterior surfaces.
6. Fit the end of the short silicone tube to the spigot of the water heater flue outlet.
7. Cut the polyethylene tube included in the condensate tube kit to 348mm. Note: if connecting in-between two frames, do not cut the tube (357mm). Refer Figure 1.
8. Connect plastic tubes and plastic fittings to create a plastic tube manifold, refer Figure 1.
   a. Use a 90° elbow on the leftmost fitting, provided with the condensate trap kit.
   b. Use the tee fitting provided with a condensate tube kit to connect two polyethylene tubes together. The unused connection on the tee fitting should point upwards.
   c. Use the tee fitting provided with a condensate tube kit as the rightmost fitting. The unused connections on the tee should point vertically.
9. Connect the condensate trap assembly to the rightmost tee fitting connection facing downwards, refer Figure 1.
10. Secure each polyethylene tube connection with the plastic ratchet clamps provided with condensate tube kits.
11. Connect each long silicone tube to the upward facing tee fitting connections. Ensure the silicone tube is not kinked, twisted or pinched.
12. Affix the condensate trap retaining bracket provided with the condensate trap kit to the frame member using tek screws provided.
13. Affix the condensate manifold to the frame member with p-clips provided with the condensate tube kits.
14. Direct the outlet of the condensate trap to a suitable drain. Plastic elbows are provided to direct the outlet to a convenient position. The last tube section at the end of the condensate trap assembly may be cut shorter, however any other section of the trap assembly must not be tampered with.
15. Remove the short silicone tube on the rightmost condensate elbow assembly and fill the trap with water. Observe that water freely discharges from the outlet of the condensate trap. Fit the short silicone tube back on the CFWH flue spigot.
16. Repeat procedures 4 to 15 on the rear CFWHs for back to back systems. Note: for the rear CFWHs on back to back systems, use a 90° elbow provided with the condensate trap kit as the rightmost fitting as outlined in the section 8(c).

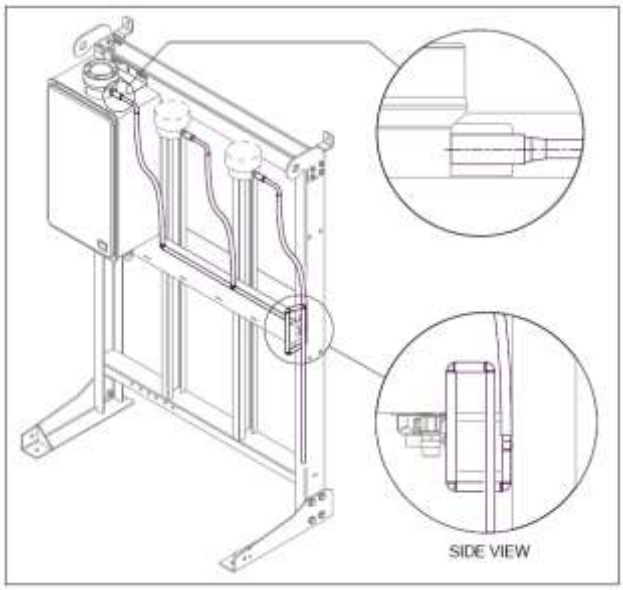

⚠ **Warning:** Failure to fill with water may cause flue gasses to escape through the condensate trap. Check regularly to ensure the condensate trap is filled with water, replenishing when required.

⚠ **Warning:** Do not remove or tamper with the condensate trap. Only the end tube of the condensate trap may be cut to aid in directing the discharge point.

Notes
AS/NZS 3500.4 is used as a guide in preparing the following drainage recommendations.

As the condensate is mildly acidic, copper tube and fittings must not be used as they will corrode.

Use UPVC (Unplasticised Polyvinyl Chloride) or PE (polyethylene) piping.

The drain line must not discharge onto electrical connections, earth stakes, copper pipe, concrete paths or into a pond.

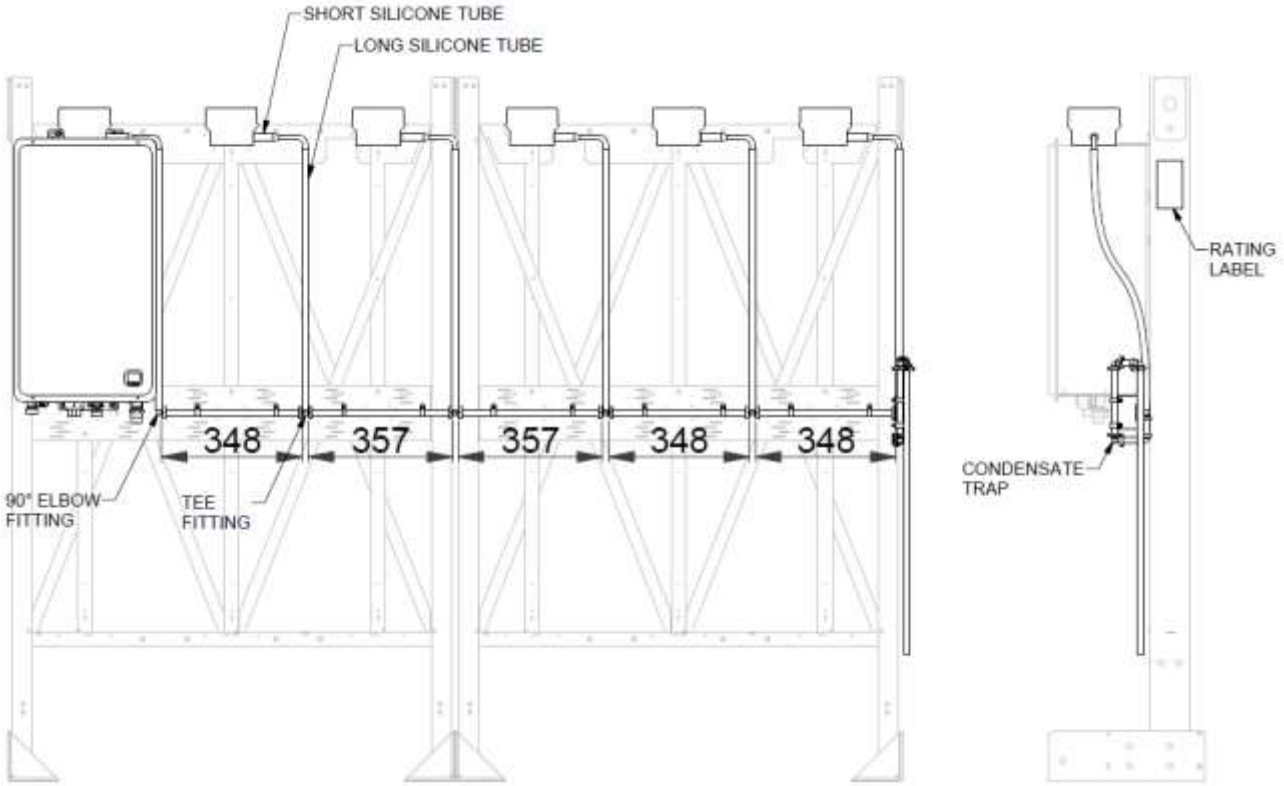

Figure 18- Condensate Trap and Condensate Drain Line

HORIZONTAL FLUE RUNS

There are several basic installation requirements which must be followed for a flue installation incorporating horizontal flue runs.

Failure to observe these precautions can lead to the premature failure of the flue system and / or water heater.

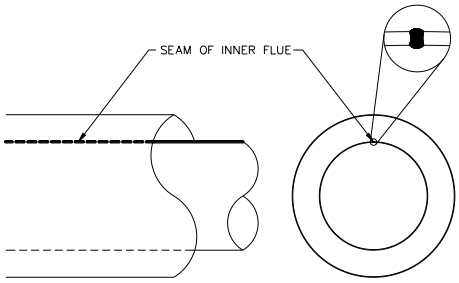

- The flue must be installed with the seam of the inner flue toward the top of the installation.
- A horizontal section of flue must be installed with a gradient of 20 mm per metre (1 in 50 or 1° fall) of horizontal run.
- A horizontal run of flue between two elbows, where the elbow closest to the flue terminal is **orientated upward**, must have a gradient upward to the flue terminal.
  - Condensate will drain back toward the water heater. Connection to the condensate manifold must be made where the horizontal flue is installed with an upward gradient. Refer to "Draining the Condensate" on page **31**.

    This ensures any condensate formed during operation of the water heater is prevented from draining back into the water heater.
- A horizontal run of flue connecting directly to a Horizontal Flue Terminal must have a gradient downward to the flue terminal.

  This prevents rainwater from entering the flue draining back into the water heater.
  - Use Male to Male and Female to Female Adapters to reverse the direction of flue insertion where three or more sections of flue are used in a horizontal flue run and the flue drains toward the flue terminal. Refer to Figure 19- Typical Installation – Horizontal Terminal with One Elbow on page **34**.

    This provides for proper draining of condensate without pooling at the flue component joins.

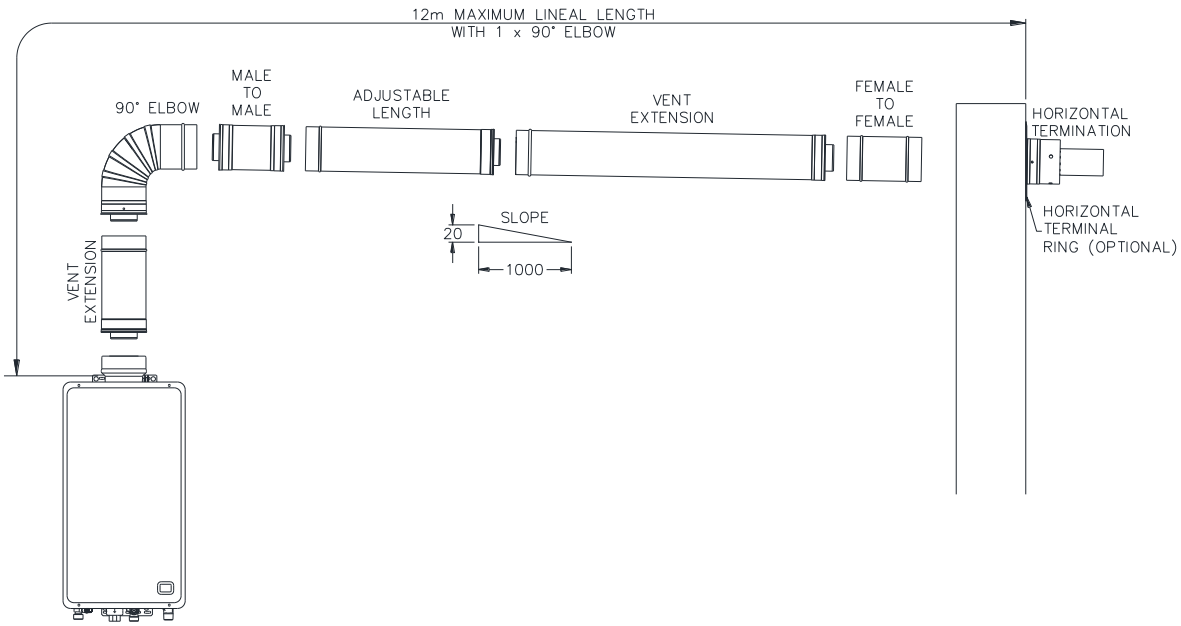

Figure 19- Typical Installation – Horizontal Terminal with One Elbow

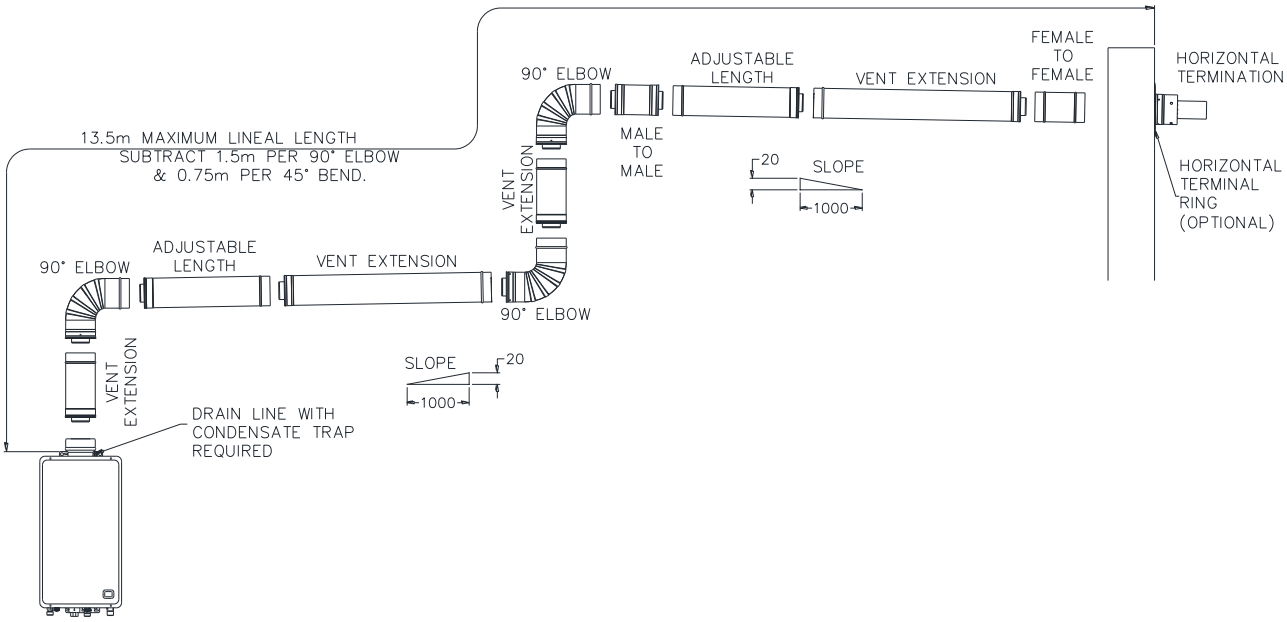

Figure 20- Typical Installation Horizontal Terminal with Multiple Vertical and Horizontal Sections

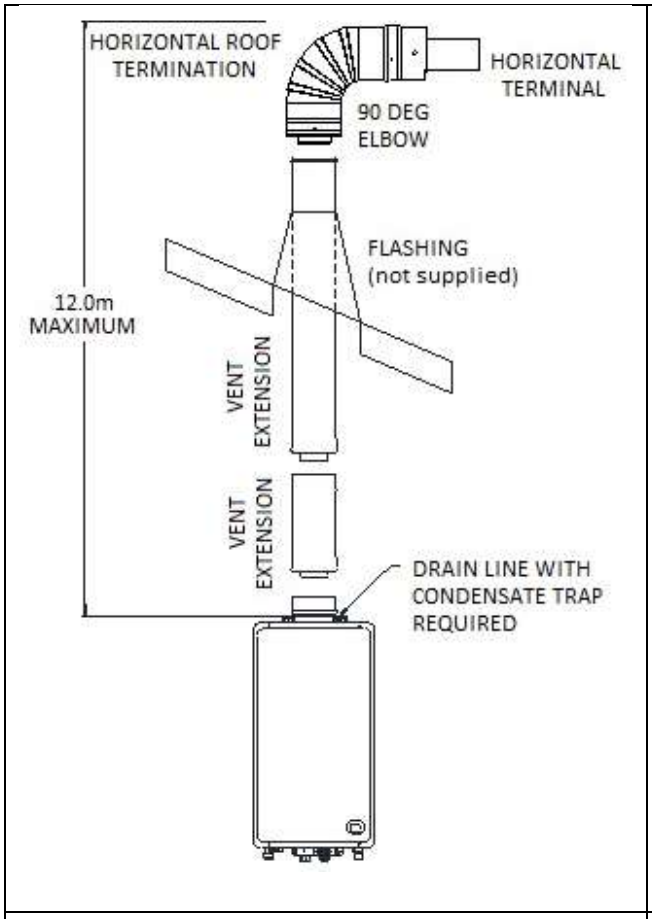

Figure 21- Typical Installation Through the Roof Flueing with Vertical Sections

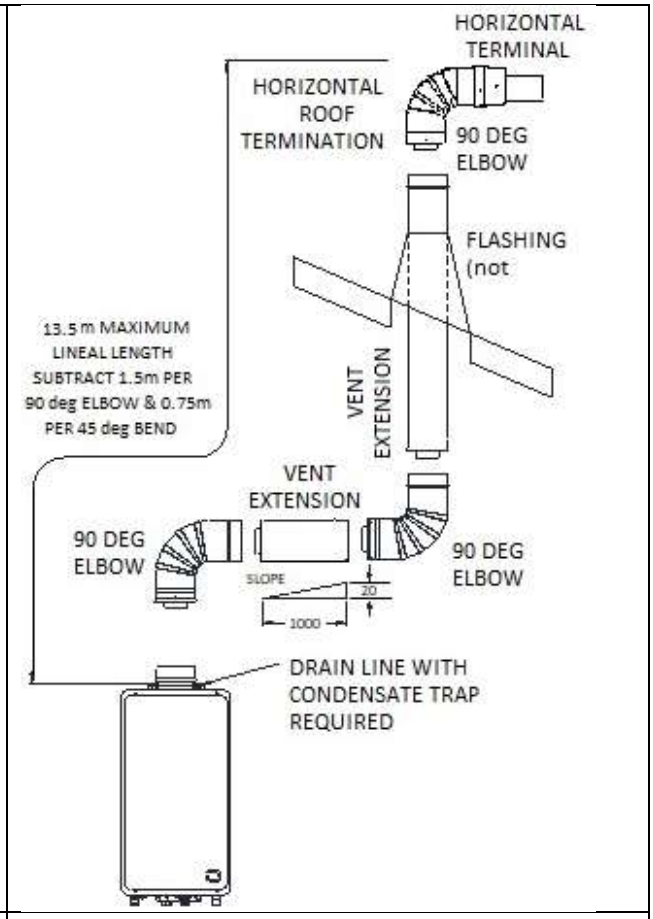

Figure 22- Typical Installation Through the Roof with Vertical and Horizontal Sections

HORIZONTAL FLUE INSTALLATION

Horizontal Flueing – Directly Behind Water Heater

This method of flue installation is used where the secondary flue is to penetrate and terminate immediately behind the wall on which the water heater is mounted.

Do not remove the plastic film from the flue outlet of water heater prior to this type of flue installation, to prevent debris from the drilling operation entering the water heater flue outlet.

Notes:

Ensure each flue component is fully engaged and the rubber seal on the inner duct is well seated at each joint.

Each flue component is supplied with screws to connect to the adjacent flue component. The screws are located in a bag taped to the outside of the flue component.

1. Carefully remove the template inserted as the middle pages of this installation instructions booklet.
2. Align the mounting bracket holes on the template exactly over the upper wall mounting bracket holes on the water heater.

   This step presumes the water heater is hung on the wall. For floor mounted units, align the template as close as possible with the upper mounting bracket holes on the water heater.

   - It may be convenient to tape the template to the wall.

   Note: Ensure there are no studs, noggins, pipes or electrical cables located in the wall where the flue is to penetrate

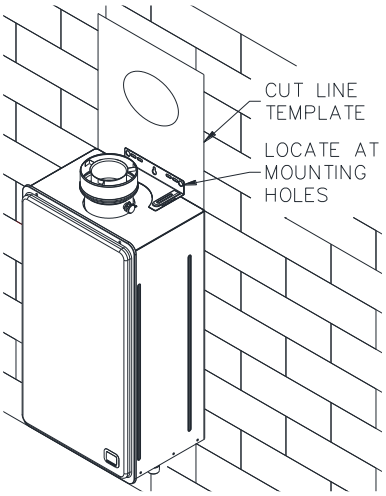

Position template

3. Mark the pilot hole location through the centre of the template.
   - Remove but **DO NOT DISCARD** the template, repeat for each water heater.
4. Drill a pilot hole using a 6.5 mm diameter or smaller drill bit.

   The drill bit must be long enough to penetrate completely through the outer skin of the external wall.

   Note: Ensure the drill remains level and straight during this step.
5. Cut along the middle of the **bold** circle marked “Cut Line” on the template.
6. Align the centre of the template with the pilot hole on the wall surface and scribe around the template onto the wall.

   The circle should be 150 mm in diameter.

   - Remove but **DO NOT DISCARD** the template, repeat for each water heater.
7. Align the centre of the template with the pilot hole on the outside wall surface and scribe around the template onto the wall.

   The circle should be 150 mm in diameter.

   - Remove the template.
8. Drill or cut the flue termination hole through the wall using a cutting tool suitable for the wall construction.

   Note: The Trim Ring (PN 295125) will cover a 150 mm diameter hole.

9. Connect the horizontal terminal (PN295146) and 300mm straight length (PN 295152) into the hole it the wall. Fit a trim ring over the last section of flue.

10. Secure each flue component using the sheet metal screws provided.

11. Connect the 90° Elbow (PN 295147) to the water heater flue outlet so it is orientated behind the water heater.

    - Fit the end of the elbow down over the water heater flue outlet as far as it will go.

      Ensure there is a minimum 35 mm and maximum 42 mm overlap, the rubber seal on the inner flue is well seated and the elbow is fully engaged on the water heater flue outlet.

    - Secure the elbow to the outlet with the screws provided.

    Note: A total wall thickness of greater than 170 mm will require a 300 mm Straight Length of flue.

12. Fit the Horizontal Terminal assembly to the 90° Elbow and secure using the sheet metal screws provided.

13. Adjust the mounting brackets at the top and bottom of the water heater if required. Bracket adjustment of up to 30 mm can be made and may assist with flue fitment and alignment.

14. Check the end of the outer skin of the flue terminal extends a minimum of 75 mm from the face of the external wall.

15. Apply an adequate bead of sealant around the flue assembly and exterior wall of the building, using a general purpose silicone sealant suitable for outdoor application.

    Failure to properly seal the flue penetration through the wall will result in long term damage due to weather conditions.

16. Apply an adequate bead of sealant on the rear face of a Trim Ring, using a general purpose silicone sealant suitable for outdoor application.

    - Fit the Trim Ring over the flue terminal and press against the wall.

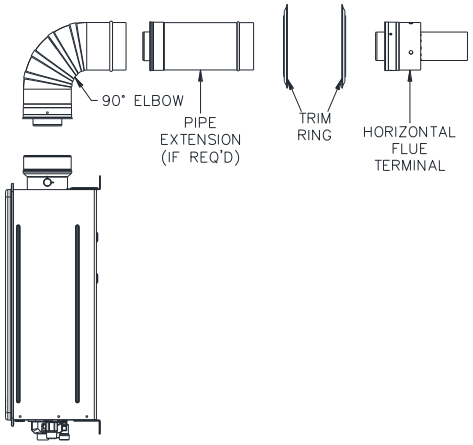

flue components required

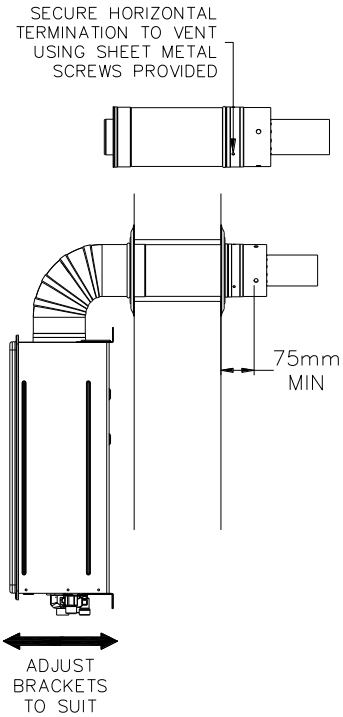

17. Apply an adequate bead of sealant around the flue assembly and interior wall of the building and on the rear face of the Trim Ring, using a general purpose silicone sealant suitable for indoor application.

    Press the Trim Ring against the wall.

Refer to "Connections – Electrical" on page **46** electrical connection details and "Commissioning" on page **51** for the commissioning details of the water heater.

Horizontal Flueing – Extended Flue Run
Notes:

- Ensure each flue component is fully engaged and the rubber seal on the inner duct is well seated at each joint.
- Each flue component is supplied with screws to connect to the adjacent flue component. The screws are located in a bag taped to the outside of the flue component.
- Refer to diagrams:
  - "Typical Installation – Horizontal Terminal with One Elbow" on page **34**, and
  - "Typical Installation – Horizontal Terminal with Multiple Vertical and Horizontal Sections" on page **35**.

To install an extended horizontal flue and termination:

1. Install the water heater in its final location.
2. Connect the 90° Elbow (PN 295147) to the water heater flue outlet and rotate in the desired direction of discharge, if the flue is not to have a change of direction from horizontal to vertical.
   - Fit the end of the elbow down over the water heater flue outlet as far as it will go.

     Ensure there is a minimum 35 mm and maximum 42 mm overlap, the rubber seal on the inner flue is well seated and the elbow is fully engaged on the water heater flue outlet.
   - Secure the elbow to the outlet with the screws provided.
3. Mark the location where the top of the flue is to penetrate the wall to outside of the building.

   If the flue is not to have a change of direction from horizontal to vertical, then to accurately mark this position:

   - Measure the vertical distance from the floor to the top of the 90° Elbow, and
   - Measure the horizontal distance from the wall behind the water heater to the centre of the 90° Elbow, and
   - Then, where the flue is expected to penetrate the wall, mark the vertical distance up from the floor and the horizontal distance out from the wall measured from the previous steps.

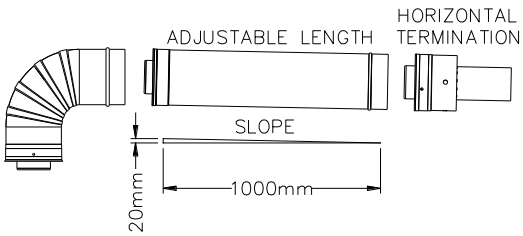

   Note: If the flue is to have an additional one or two horizontal changes of direction, then it is not necessary to measure or mark the horizontal distance from the wall behind the water heater to the centre of the 90° Elbow.

   - Alternatively, using a level, run from the top of the 90° Elbow to a location horizontal on the wall where the flue will penetrate and mark this point on the wall
   - Measure the horizontal distance, along the proposed flue route, from the end of the 90° Elbow to the where the flue is to penetrate the wall.

     Divide this measurement by 50 to calculate the vertical distance fall of the flue (allowing for a 1 in 50 fall).
   - Measure this distance down from the previous mark placed on the wall.

     This point will be the top of the flue termination hole and the flue will have a gradient of 20 mm per metre of length towards the terminal.

   Note: Ensure there are no studs, noggins, pipes or electrical cables located in the wall where the flue is to penetrate

4. Carefully remove the template inserted as the middle pages of this installation instructions booklet.
   - Cut along the middle of the **bold** circle marked “Cut Line”.
5. Align the top of the circular template with the mark on the wall.
   - It may be convenient to tape the template to the wall.
6. Mark the pilot hole through the centre of the template and scribe around the template onto the wall.

   The scribed circle should be 150 mm in diameter.
   - Remove but **DO NOT DISCARD** the template, repeat for each water heater.
7. Drill a pilot hole using a 6.5 mm diameter or smaller drill bit.

   The drill bit must be long enough to penetrate completely through the outer skin of the external wall.

   Note: Ensure the drill remains level and straight during this step.
8. Align the centre of the template with the pilot hole on the outside wall surface and scribe around the template onto the wall.

   The scribed circle should be 150 mm in diameter.
   - Remove the template.
9. Drill or cut the flue termination hole through the wall using a cutting tool suitable for the wall construction.

   Note: The Trim Ring (PN 295125) will cover a 150mm diameter hole.
10. Starting from the 90° Elbow and working towards the terminal location, connect all of the other flue system components.
    - Ensure each flue component is fully engaged and the rubber seal on the inner duct is well seated at each joint.
11. Secure each flue component using the sheet metal screws provided.
12. Support horizontal sections at a distance no greater than 2 m using a Wall Bracket (PN 295129).

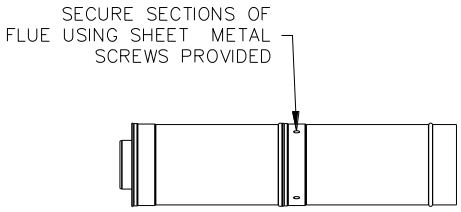

13. A horizontal run of flue connecting directly to a Horizontal Flue Terminal must have a downward gradient to the flue terminal.
    - Use Male to Male and Female to Female Adapters to reverse the direction of flue insertion where three or more sections of flue are used in a horizontal flue run and the flue drains toward the flue terminal. Refer to the diagram on page **34**.

      This provides for proper draining of condensate without pooling at the flue component joins.
14. A horizontal run of flue between two elbows, where the elbow closest to the flue terminal is **orientated upward**, must have a gradient upward in the direction of the flue terminal.

    Note: Connection to the condensate manifold must be made if the flue has a gradient upward in the direction of the flue terminal. Refer to **step 22**.
15. The Adjustable Straight Length (PN 295153) may be required if a special length is required between offsets or changes in direction of the flue or to ensure the outer skin of the Horizontal Flue Terminal extends a minimum of 75 mm from the face of the external wall.
    - The Adjustable Straight Length can be adjusted from 560 mm to 890 mm by pulling on its end to increase its length or pushing on its end to decrease its length.
16. Fit a Trim Ring over the last section of flue prior to penetrating the wall.

17. Once the flue is assembled and penetrating the wall, install the Horizontal Terminal and secure the termination to the flue using the sheet metal screws provided.

    Note: If the flue terminal position is more than 1800 mm above a safe working surface, then suitable equipment will be required to enable safe access to fit the flue terminal.

    Alternatively, the flue terminal may be fitted to the flue assembly prior to the assembly penetrating the wall.

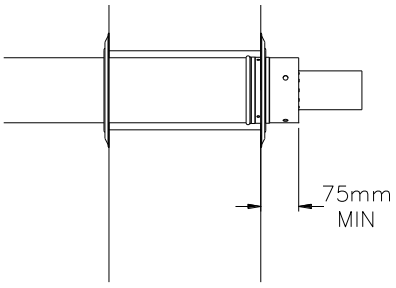

18. Make a final adjustment to the Adjustable Straight Length, if required, to ensure the end of the outer skin of the flue terminal extends a minimum of 75 mm from the face of the external wall.

    - Firmly tighten the compression band on the Adjustable Straight Length to prevent the pipe from extending or compressing its length over time.

19. Apply an adequate bead of sealant around the flue assembly and exterior wall of the building, using a general purpose silicone sealant suitable for outdoor application.

    Failure to properly seal the flue penetration through the wall will result in long term damage due to weather conditions.

20. Apply an adequate bead of sealant on the rear face of a Trim Ring, using a general purpose silicone sealant suitable for outdoor application.

    - Fit the Trim Ring over the flue terminal and press against the wall.

21. Apply an adequate bead of sealant around the flue assembly and interior wall of the building and on the rear face of the Trim Ring, using a general purpose silicone sealant suitable for indoor application.

    Press the Trim Ring against the wall.

22. Connect the condensate drain spigot on the water heater flue outlet to the condensate manifold if the flue has a change of direction from horizontal to vertical or if there is a long vertical rise directly from the water heater.

    Refer to "Draining the Condensate" on page **31** and to Figure **18-** Condensate Trap and Condensate Drain Line on page **33**.

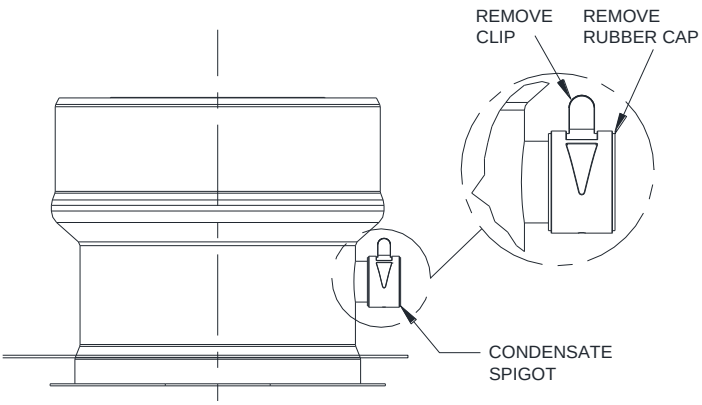

Condensate drain spigot

Refer to "Connections – Electrical" on page **46** electrical connection details and "Commissioning" on **page 51** for the commissioning details of the water heater.

Through the Roof Installation
Suitable flashing (not supplied) is required to waterproof the roof penetration.

Notes:

- Ensure each flue component is fully engaged and the rubber seal on the inner duct is well seated at each joint.
- Each flue component is supplied with screws to connect to the adjacent flue component. The screws are located in a bag taped to the outside of the flue component.
- Refer to diagrams:
  - "Typical Installation – Through the Roof Flueing" on page **35**, and
  - "Typical Installation – Through the Roof Flueing with Vertical and Horizontal Sections" on page **35**.

To install a vertical flue and termination:

1. Determine the location where the flue will penetrate through the roof.

   Note: Ensure there are no rafters, purlins, pipes or electrical cables located in the roof where the flue is to penetrate.

2. Drill or cut the flue termination holes through the roof and ceiling of a suitable size to allow the installation of the flue, using a cutting tool suitable for the roof construction.

3. Connect the condensate drain spigot on the water heater flue outlet to the condensate manifold assembly.

   Refer to "Draining the Condensate" on page **31** and to Figure **18-** Condensate Trap and Condensate Drain Line on page **33**.

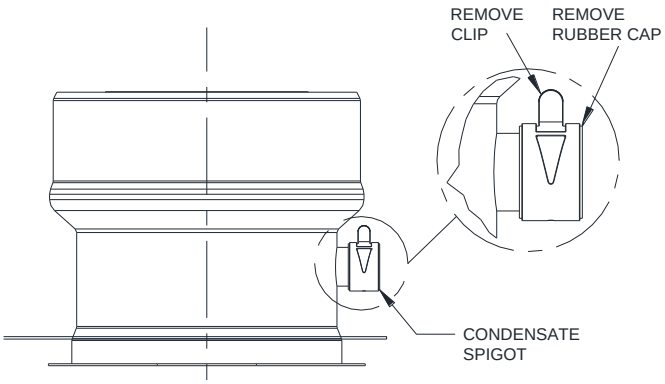

Condensate Drain Spigot

4. Connect the first flue component to the water heater flue outlet.
   - Fit the end of the flue component down over the water heater flue outlet as far as it will go.

     Ensure there is a minimum 35 mm and maximum 42 mm overlap, the rubber seal on the inner flue is well seated and the flue component is fully engaged on the water heater flue outlet.

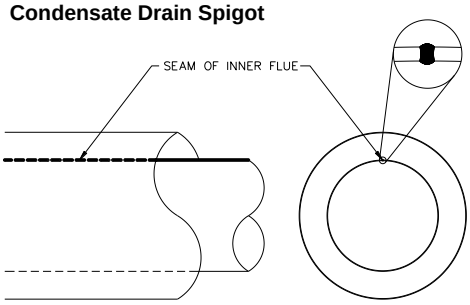

   - Secure the elbow to the outlet with the screws provided.

5. Continuing from the first flue component and working towards the terminal location, connect all of the other flue system components.
   - Ensure each flue component is fully engaged and the rubber seal on the inner duct is well seated at each joint.

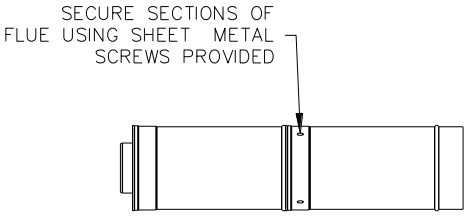

6. Horizontal flue runs between elbows must have a minimum upward gradient towards the flue terminal of 20 mm per metre.

   Note: Ensure that the seam of the inner flue in horizontal runs is towards the top of the installation.

7. Secure each flue component using the sheet metal screws provided.

8. Fix a Wall Bracket after each transition to a vertical run.

   This is to prevent vertical loading on the elbows and offsets.

9. Support vertical sections of flue at a distance no greater than 2 m using a Wall Bracket (PN 295128).

   Note: The Wall Bracket can be used to support vertical sections of flue from a ceiling by rotating the legs through 90°.

10. Install an Adjustable Straight Length (PN 295153) if a special length is required between offsets or changes in direction of the flue.

    - The Adjustable Straight Length can be adjusted from 560 mm to 890 mm by pulling on its end to increase its length or pushing on its end to decrease its length.
    - Firmly tighten the compression band on the Adjustable Straight Length to prevent the pipe from extending or compressing its length over time.

11. Fit a Trim Ring over the last section of flue prior to penetrating the ceiling, if one is to be fitted.

12. Once all flue components, excluding the 90 degree Elbow and Horizontal Terminal, have been installed and all supports are securely fastened, the roof flashing must be installed and adequately sealed to prevent rain entry.

    - Cut the flashing to a diameter that allows a snug fit over the flue.
    - Install the roof flashing over the flue and using suitable fasteners, fix to the roof material.

      The flue must extend a minimum of 150 mm through the roof flashing.

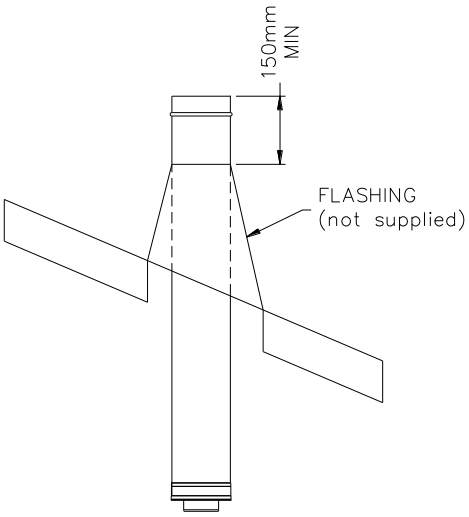

13. Connect the 90 degree Elbow (295147) and Horizontal Terminal (295146), to the flue exiting the roof.

    - Secure the joint with sheet metal screws provided.

    The bottom of the Horizontal Terminal should not be less than 450 mm above the flashing below.

    Observe flue terminal clearances in accordance with AS/NZS 5601.1. Refer also to "Flueing Through the Roof" on page **30**.

    Note: The flue should not extend more than 1.5 m from the roof unless guy wires or other additional support is provided.

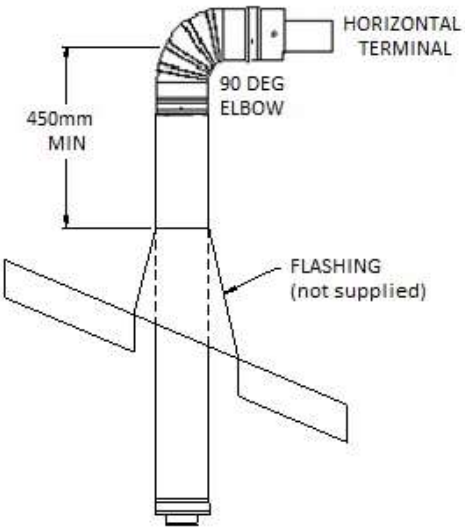

14. Apply an adequate bead of sealant around the flue assembly and flashing and around the flashing and roof material, using a general purpose silicone sealant suitable for outdoor application.

    Failure to properly seal the flue penetration through the roof will result in long term damage due to weather conditions.

15. Apply an adequate bead of sealant around the flue assembly and ceiling and on the rear face of the Trim Ring (if fitted), using a general purpose silicone sealant suitable for indoor application.

    Press the Trim Ring (if fitted) up against the ceiling.

16. Upon completion of the secondary flue installation, remove the warning label adhered to the top left hand corner of the water heater's front panel.

Refer to "Connections – Electrical" on page **46** electrical connection details and "Commissioning" on page **51** for the commissioning details of the water heater.

MULTIPLE WATER HEATER FLUE INSTALLATION

Where multiple water heaters are installed, each water heater must be individually flued to the outside. A common flue system **MUST NOT** be used.

For a multiple unit installation, the water heater is certified for installation with zero clearance between adjacent water heaters.

If multiple water heaters are mounted on a wall it is necessary to leave a suitable space of 20 mm between each water heater if condensate manifold assembly is to be installed.

Refer to "Flue Terminal Location" on page **30** for flue terminal clearances from other objects in accordance with AS/NZS 5601.1.

Follow the relevant instructions pertaining to the type of flue installation, with the following additional requirements in relation to flue terminal clearances to be taken into account. The distances are based on using the coaxial flue system components.

Note: All flues for multiple water heaters **MUST** terminate horizontally.

Flueing Through the Wall

1. The minimum **horizontal** centre to centre distance between flue terminals is to be no less than 360 mm.
2. The minimum **vertical** centre to centre distance between flue terminals is to be no less than 570 mm.

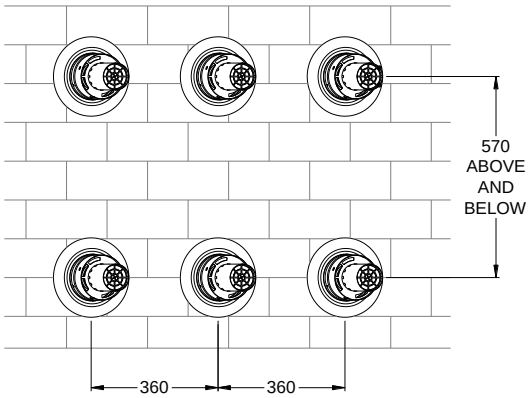

Flueing Through the Wall

Flueing Through the Roof

The minimum **side by side** centre to centre distance between flue terminals is to be no less than 360 mm.

1. Run the flueing through the roof as dictated by plant room requirements.
2. Each flue is to be terminated horizontally by using 90 degree elbows (PN 295147) and horizontal flue terminals (PN 295146).
3. The flue terminals for back to back water heaters should be installed 180 degree opposite to each other as shown.

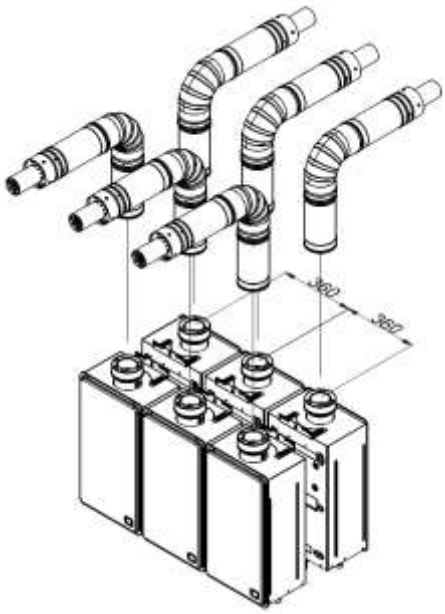

Flueing Through the Roof

MULTIPLE WATER HEATER CONDENSATE TRAP AND CONDENSATE DRAIN LINE INSTALLATION

Depending upon the type of installation, it may be necessary to install a condensate trap and condensate drain line to each water heater. Refer to "Draining the Condensate" on page **31**.

The drain line from each condensate trap may be:

- Drained separately to a discharge point, or
- Manifolded together with a single drain line running to a discharge point.

If discharged separately, a condensate trap must be installed and filled with water in each water heater drain line prior to the discharge point.

CONDENSATE MANIFOLDED ASSEMBLY

If discharged from a manifolded drain line, follow below steps to install a condensate trap kit (P/N AS33121006) and condensate tube kit (P/N AS3312007):

17. Identify the number of condensate tube kits required (AS3312007). One (1) condensate tube kit is required for each CFWH.
18. One (1) condensate trap kit is required (AS3312006) per a condensate manifold. Back to back systems require a manifold for each side and therefore 2 trap kits will be required.
4. Install the CFWHs with 363mm pitch (or 20mm spacing between adjacent CFWH).
5. Remove the clamp and rubber cap from the condensate drain spigot on the water heater flue outlet. Ensure that each spigot is facing towards the right-hand side when facing the CFWH front cover. Discard the clamp and the rubber cap.
6. Fit the long silicone tube and aluminium tube included in the condensate tube kit between the CFWHs Ensure the silicone tube is not kinked, twisted or pinched and ensure it is not caught on any CFWH exterior surfaces.
7. Fit the end of the short silicone tube to the spigot of the water heater flue outlet.
8. Cut the polyethylene tube included in the condensate tube kit to 348mm.
9. Connect plastic tubes and plastic fittings to create a plastic tube manifold.
   - Use a 90° elbow on the leftmost fitting, provided with the condensate trap kit.
   - Use the tee fitting provided with a condensate tube kit to connect two polyethylene tubes together. The unused connection on the tee fitting should point upwards.
   - Use the tee fitting provided with a condensate tube kit as the rightmost fitting. The unused connections on the tee should point vertically.
10. Connect the condensate trap assembly to the rightmost tee fitting connection facing downwards.
11. Secure each polyethylene tube connections with the plastic ratchet clamps provided with condensate tube kits.
12. Connect each long silicone tube to the upward facing tee fitting connections. Ensure the silicone tube is not kinked, twisted or pinched.
13. Affix the condensate trap retaining bracket to the wall provided with the condensate trap kit using suitable anchors.
14. Affix the condensate manifold to the wall. P-clips are provided with condensate tube kits.
15. Direct the outlet of the condensate trap to suitable drain. Two plastic elbows are provided to direct the outlet to a convenient position. The last tube section at the end of the condensate trap assembly may be cut shorter, however any other section of the trap assembly must not be tampered.
16. Fill the trap with water from the short silicone tube on the rightmost condensate elbow assembly. Observe that water freely discharges from the outlet of the condensate trap. Fit the short silicone tube back on the CFWH flue spigot.

Warning: Failure to fill with water may cause flue gasses to escape through the condensate trap. The condensate trap should be regularly checked to ensure it is filled with water, replenishing when required.

Notes:

AS/NZS 3500.4 is used as a guide in preparing the following drainage recommendations.

- As the condensate is mildly acidic, copper tube and fittings must not be used as they will corrode.
- Use UPVC (Unplasticised Polyvinyl Chloride) or PE (polyethylene) piping.
- The outlet of the drain line must be in such a position that flow can be easily seen, but arranged so that discharge will not cause injury, damage or nuisance.
- The drain line must not discharge onto electrical connections, earth stakes, copper pipe, concrete paths or into a pond.

CONNECTIONS - ELECTRICAL

All electrical work and permanent wiring must be carried out by a qualified person and in accordance with the Wiring Rules AS/NZS 3000 and all local codes and regulatory authority requirements.

The water heater will only operate on a sine wave at 50 Hz. Devices generating a square wave cannot be used to supply power to the water heater.

HOT WATER SYSTEM CONTROLLER

- Power supply:
  - 240V/1Ph/50Hz Power Supply to the controller.
  - Requires 16A Type C or D curve up front protection
- Hard wired to the requirements of AS/NZS 3000: Wiring Rules and local regulations.

INTERNAL COMMPAK SINGLE PUMP - MAJOR ITEMS LISTING (CPI03 SHOWN)

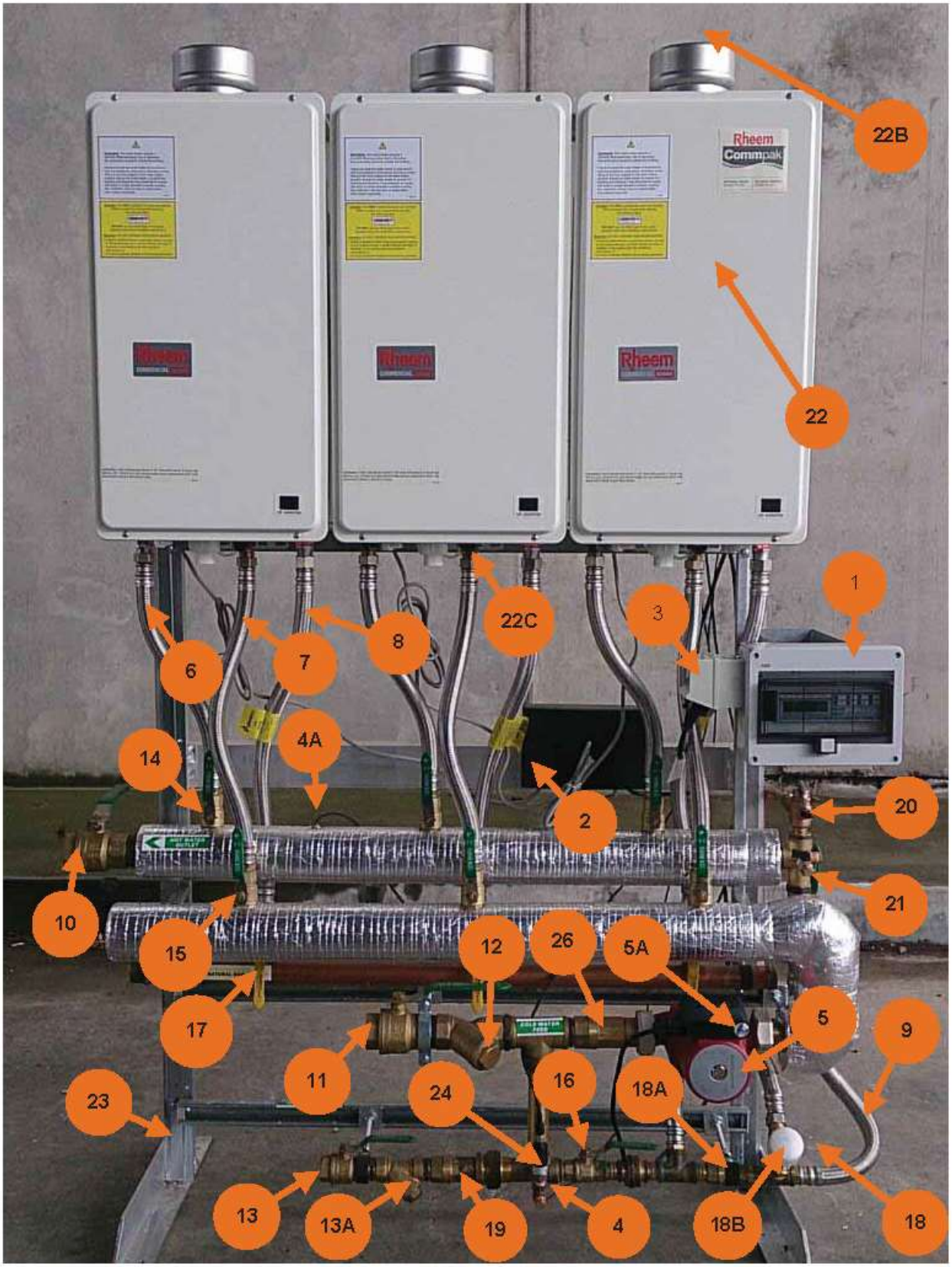

EXTERNAL COMMPAK DUAL PUMPS - MAJOR ITEMS LISTING (CPE03 SHOWN)

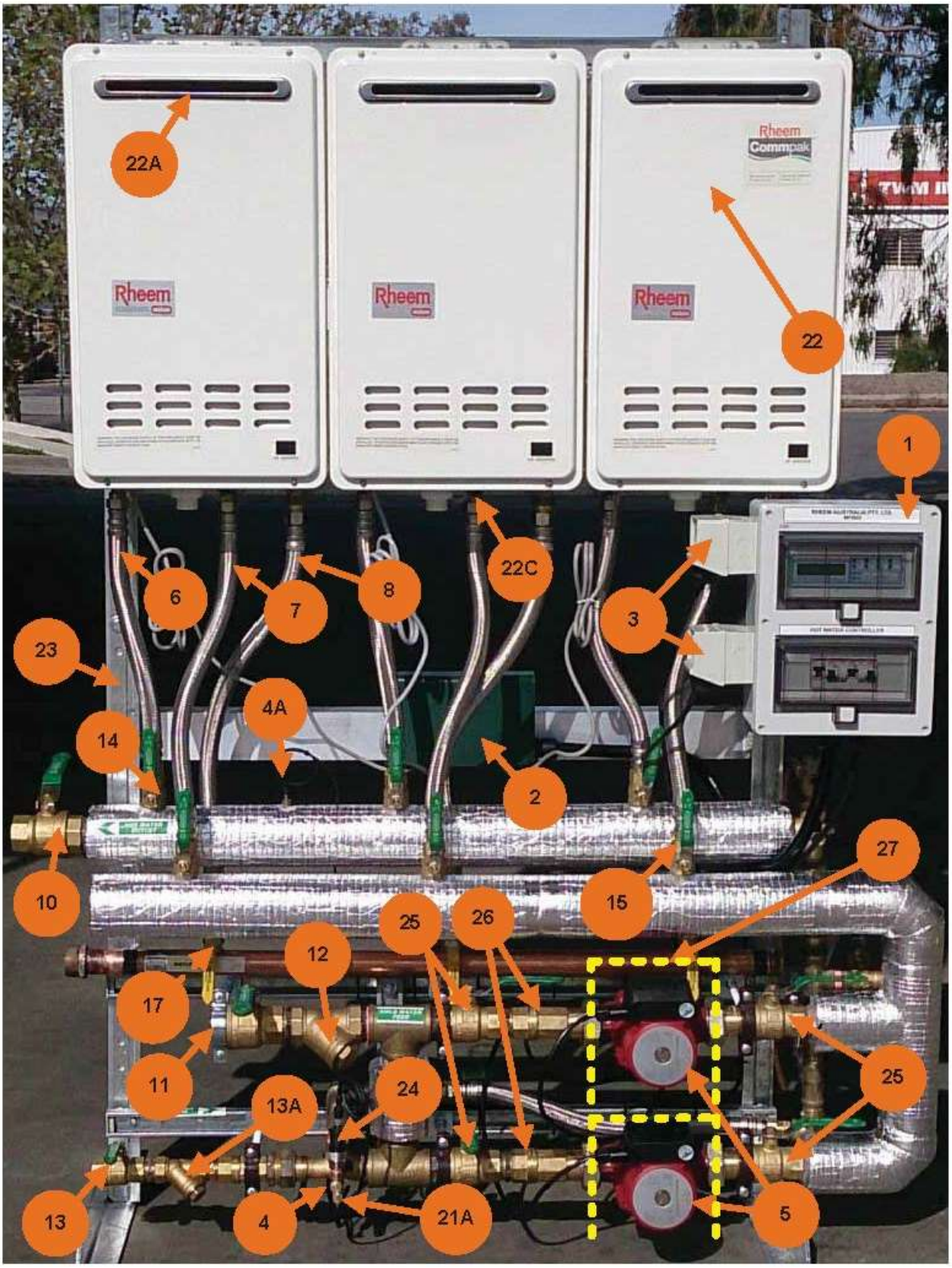

COMMPAK – MAJOR ITEMS LISTING

Refer to Photographs **(Pages 47 & 48**); Major Items Listings / Identification (**Pages 49 & 50**) and External & Internal Commpak General Drawings (**Pages 19 to 22).**

Item No.	Description	Function	P&EES Part No's.
1	System Controller	Starts & Stops Pump/s Displays Outlet & Inlet Water Temperature	Single Pump: UP-TCM-1-SP Dual Pumps: UP-TCM-1-DP
2	Water Heater General Purpose Power Outlet(s)	240VAC – 1 Phase – 10A x 3 Outlets Local power supply for Water Heater(s)	B-GPO-3
3	Pump Power Outlet	240VAC – 1 Phase – 10A Dedicated local power supply for Pump	P-GPO-1
4	Temperature Sensor	Water Inlet Temperature Sensor	TSP
4A	Temperature Sensor	Water Outlet Temperature Sensor	TSP
5	Pump/s	System water supply & return circulation Refer: "Pump Details" on pages **63** to **71**	G-UPS-32-100
5A	Pump Speed Selector	Pump is suitable for 3 speed operation Factory default setting No. 3	
6	Hot Water Connector	20mm dia. Flexible connection means from the Continuous Flow Water Heater to the Hot Water Outlet manifold.	HWFC-20
7	Cold Water Connector	20mm dia. Flexible connection means from the Continuous Flow Water Heater to the Cold Water manifold.	CWFC-20
8	Gas Supply Connector	20mm dia. Flexible connection means from the Continuous Flow Water Heater to the Gas Supply Inlet manifold.	GSFC-20
9	Bi-directional Pressure Balancing Assembly Connector	20mm dia. Flexible connection means from the Bi-directional Pressure Balancing Assembly to the Hot Water Outlet manifold.	BPBAC-20
10	Hot Water Outlet Isolation Valve	40mm BSP Female Brass Ball Valve System Hot Water Outlet Isolating means	HWO40BSPF
11	Cold Water Inlet Isolation Valve	40mm BSP Female Brass Ball Valve System Cold Water Inlet Isolating means	CWIN40BSPF
12	Cold Water Inlet Strainer	40mm BSP Female Cold Water Inlet Strainer Protects pump from solids	CWIS40BSPF
13	Hot Water Return Isolation Valve	25mm BSP Female Brass Ball Valve Hot Water Return Isolating means	RWIN25BSPF
13A	Hot Water Return Strainer	25mm BSP Female Hot Water Return Strainer Protects pump from solids	RWS25BSPF
14	Hot Water Isolation Valve	20mm BSP Female Ball Valve Continuous Flow Water Heater Hot Water Isolation Means	HWI20BSPF
15	Cold Water Isolation Valve	20mm BSP Female Ball Valve Continuous Flow Water Heater Cold Water Isolation Means	CWI20BSPF
16	Bi-directional Pressure Balancing Assembly Isolation Valve	20mm BSP Female Ball Valve Bi-directional Pressure Balancing Assembly Isolation Valve Supply Isolation Means **Note**: In the event of pump failure close valve COMMPAK will operate as per MULTIPAK	BDI20BSPF
17	Gas Isolation Valve	20mm BSP Female Ball Valve Continuous Flow Water Heater Gas Supply Isolation Means	GSI20BSPF

COMMPAK – MAJOR ITEMS LISTING

Refer to Photographs (**Pages 47 & 48**); Major Items Listings / Identification (**Pages 49 & 50**) and External & Internal Commpak General Drawings on **pages 19 to 22**).

Item No.	Description	Function	P&EES Part No's
18	Bi-directional Pressure Balancing Assembly	**This assembly performs 3 functions** 1. If hot water outlet pressure is less than coldwater inlet pressure (demand exceeds design capability), assembly allows coldwater flow from inlet to outlet, to maintain mains water pressure. 2. If hot water outlet pressure is greater than coldwater inlet pressure (Nom. Set 50Kpa) low or no demand condition, assembly allows hot water flow from outlet to inlet, to maintain mains water pressure (+ 50Kpa) 3. In installations with no return circulation or high resistance, assembly allows hot water to flow from outlet to inlet, to maintain minimum flow requirement for firing of the Continuous Flow Water Heater(s)	BDPBA
18A	Bi-directional Pressure Balancing Assembly One Way Valve	Allows coldwater flow from inlet to outlet, to maintain constant pressure.	OWV-20
18B	Bi-directional Pressure Balancing Assembly Regulating Valve	Allows hot water flow from outlet to inlet, to maintain constant pressure and minimum flow requirement for firing of the continuous flow water heater(s) Normally Set: 50-60Kpa (Flow & Return Systems) 10Kpa (Dead Leg / No Return Systems)	RV-20
19	Hot Water Return One Way Valve	Prevents reverse flow of cold water into hot water reticulation system.	OWV-20
20	Pressure Safety Valve	System safety relief valve - 12 Bar operation	PSV-12
21	Plug & Gauge Cock	Hot water manifold 6mm Test point for pressure gauge	PGC-6
21A	Plug & Gauge Cock	cold water manifold 6mm test point for pressure gauge & Isolation means for loss of prime testing	PGC-6
22	Continuous Flow Water Heater	Water Heating means. Refer: Rheem 627 Owner's Guide & Installation Instructions Electronic Continuous Flow Gas Water Heater Model 627 Outdoor - Series 872 & Indoor - Series 862 for further details	Rheem Supply Item
22A	External Continuous Flow Water Heater Flue Outlet	Recommended 800mm access clearance from Flue Outlets. Clearance measurements for horizontal flue terminals Refer Australian Standard Gas Installations AS/NZS 5601.1	
22B	Internal Continuous Flow Water Heater Flue Outlet	Refer to "Flueing" on page **28** for flueing instructions.	
22C	Continuous Flow Water Heater water inlet strainer	Protects the Continuous Flow Water Heater from damage due to ingress of solids. Located on cold water inlet of Water Heater	
23	Mounting Frame	Hot water System mounting frame assembly Refer Commpak general arrangement drawings for full details	MF ASS CE 040 to CE 120
24	Pressure Switch	Pump protection against dry running Pump disabled <110kPa & re-enabled > 130kPa	WPS+C
25	Pump Isolation Valve	32mm BSP Female Ball Valve. Pump isolation means	PIV32BSPFM
26	Pump Discharge one way valve	32mm Pump one way valve. Prevents back flow circulation through stationary pump	POWV32
27	Pump Weather Cover	UV stabilized weather cover for the pump. For external installation only.	PWC

COMMISSIONING

All water heaters are tested and adjusted before dispatch from the factory, however further adjustments may become necessary because of local conditions.

INITIAL CHECKS

1. Check that the power supply to the system controller(Item #1) is switched OFF.
2. Check that an adequate water supply is available to the Commpak hot water system.
   Water supply pressure shall not exceed 800kPa.
3. OPEN cold water inlet valve (Item #11), hot water outlet valve (Item #10) & hot water return valve (Item #13)
   Check all individual water heater isolation valves (Items #14 & #15) are OPEN;
   Check bi-directional pressure balancing isolation valve (Item #16) is OPEN.
4. Check that the system is fully charged, all the air is bled from the system and no leaks are evident.
   Air shall be bled by opening the hot water outlets in the building pressure relief valve of the hot water system (Item #20) and .pump bleed disk (item #5)
5. Check the pipe work for leaks
6. OPEN all individual water heater gas isolation valves (Item #17) and purge gas lines.
7. Check the gas pipe work for leaks

To complete the installation, it is necessary to check the gas supply pressure at the inlet to the water heater (refer to "Gas Inlet Pressure" on page **51)**, the minimum test point pressure and the maximum test point pressure (refer to "Burner Gas Pressure" on page **53**).

⚠ **Warning:** Upon completion of the installation and commissioning of the water heater, leave this guide with a responsible officer. **DO NOT** leave this guide inside of the cover of the water heater, as it may interfere with the safe operation of the water heater or ignite when the water heater is turned on.

GAS INLET PRESSURE

IMPORTANT - CHECK the gas supply pressure at the inlet to the water heater with the water heater and all other gas burning appliances in the premises operating (burners alight). The minimum gas supply pressure is:

Natural Gas	1.13 kPa	Propane	2.75 kPa

If this minimum cannot be achieved, it may indicate the meter or the gas line to the water heater is undersized. It is important to ensure that an adequate gas supply pressure is available to the water heater when other gas burning appliances, on the same gas supply, are operating.

GAS INLET TEST POINT PRESSURE

To check the gas inlet pressure, select the CFWH at the furthest point in the manifold as the test unit:

3. Ensure the burners are not operating, by turning off the power to the Commpak.

4. Close the gas isolation valve at the gas inlet to the CFWH.

5. Locate the gas inlet test point on the gas connection to the CFWH.

   - Remove the test point screw and washer from the test point orifice.
   - Connect the manometer.

6. Open the gas isolation valve fully at the gas inlet to the CFWH.

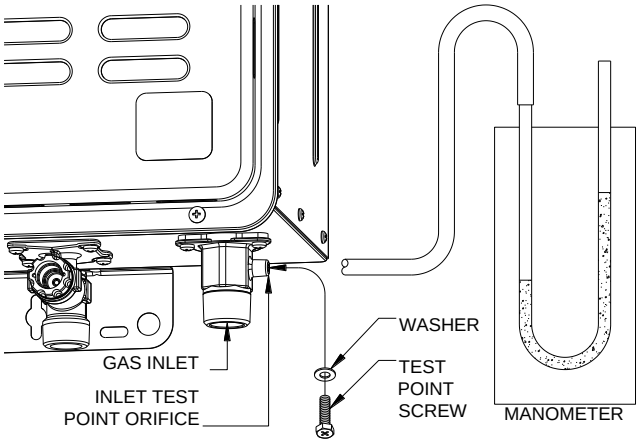

7. Observe the gas pressure reading on the manometer.

   If the manometer reading is between the minimum and maximum inlet gas pressure ratings on the rating label, no adjustment is required.

   If the manometer reading is below the minimum inlet gas pressure rating on the rating label, then either the gas pipe to the water heater is undersized and needs to be rectified or adjustment is required at the gas regulator.

   If the manometer reading is above the maximum inlet gas pressure ratings on the rating label, then adjustment is required at the gas regulator.

8. Switch on the electrical supply to the Commpak.

9. If installed as part of a recirculation system, the Commpak should start automatically. If on a dead leg system, the unit should start automatically but may shut down before checks are completed. If on a dead leg system open a hot tap fully and ensure all the CFWH are on and the burners are fully ignited. It may be necessary to open several taps.

Note: If the Commpak is using 872627 or 862627 model CFWH and is installed as an in-series gas booster for a solar water heater, then the temperature of the water entering Commpak must be at least 2°C below the water heater preset outlet temperature setting. Otherwise the gas burners will not ignite and the test point gas pressures cannot be measured.

10. Observe the gas pressure reading on the manometer.

    If the manometer reading is between the minimum and maximum inlet gas pressure ratings on the rating label, no adjustment is required.

    If the manometer reading is below the minimum inlet gas pressure rating on the rating label, then either the gas pipe to the water heater is undersized and needs to be rectified or adjustment is required at the gas regulator.

    If the manometer reading is above the maximum inlet gas pressure ratings on the rating label, then adjustment is required at the gas regulator.

11. If an adjustment was made during Step 10, repeat this procedure from Step 7.

12. Close the isolation valve on the outlet of the CFWH.

13. Close the gas isolation valve at the inlet to the CFWH.

14. Remove the manometer and refit and tighten the test point screw and washer.

15. Open the gas isolation valve fully at the gas inlet to the water heater.

16. Open the isolation valve again so the burners ignite.

17. Test for gas leaks.

18. Close the hot taps, if open

⚠ **Warning:** The removal of the front panel will expose 240 Volt wiring. Take care not to touch wiring terminals.

Note: If the Commpak is using 872627 or 862627 model CFWH and is installed as an in-series gas booster for a solar water heater, then the temperature of the water entering Commpak must be at least 2°C below the water heater preset outlet temperature setting. Otherwise the gas burners will not ignite and the test point gas pressures cannot be measured.

MINIMUM TEST POINT GAS PRESSURE

Refer to the rating label on the water heater for the minimum test point gas pressure.

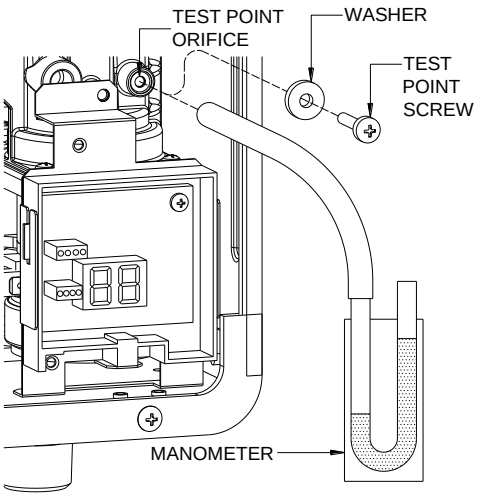

1. Ensure the burners are not operating, by turning off the power to the CFWH.
2. Remove the screws holding the front panel to the jacket.
3. Gently disengage the front panel and pull forward to remove from the water heater.
4. Locate the burner pressure test point on the main burner manifold.
   - Remove the test point screw and washer from the test point orifice.
   - Connect the manometer.
5. Switch on the electrical supply at the power outlet to the water heater.
6. Open the gas isolation valve fully at the gas inlet to the water heater, if not already open.
7. If installed as part of a recirculation system, the Commpak should start automatically. If on a dead leg system, the unit should start automatically but may shut down before checks are completed. If on a dead leg system open a hot tap fully and ensure all the CFWH are on and the burners are fully ignited. It may be necessary to open several taps.
8. Press and hold down the MIN button and observe the reading on the manometer.
   - "1L" is shown on the LED display.
9. Release the MIN button.

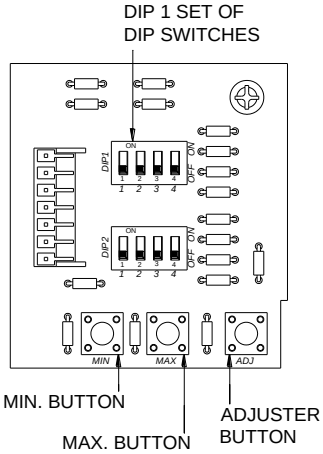

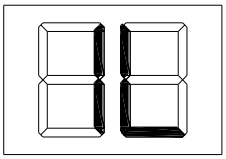

If the manometer reading observed in step 7 agrees with the rating label, no further adjustment is required.

10. To adjust, press and hold the adjuster button.
    - "LH" is shown on the LED display.

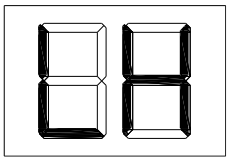

Note: The adjuster button must be held down continuously through steps 10 to 12.

11. Press and hold the MIN button and observe the reading on the manometer.
    - The manometer reading will change as the test point gas pressure adjusts.

    Note: While the MIN button is pressed, the gas pressure will at first increase then decrease, cycling between an upper gas pressure limit (39 on the LED display) and a lower gas pressure limit (01 on the LED display).
12. Release the MIN button when the reading on the manometer agrees with the rating label. Release the adjuster button.

Notes:

- If the burners extinguish and error code 11 or 12 starts to flash on the LED display:
  - release the MIN and adjuster buttons
  - close the CFWH isolation valve
  - clear the error code (refer to "Clearing Error Code" on page **54**)
  - recommence the procedure from Step 7.
- If the adjuster button is released before Step 12, clear any error code (if displayed) and recommence the procedure from Step 7.

MAXIMUM TEST POINT GAS PRESSURE
Refer to the rating label on the water heater for the maximum test point gas pressure.

Follow Steps 1 to 12 of the "Minimum test point gas pressure" procedure on page **53**, but open the hot tap fully and use the MAX button instead of the MIN button. It may be necessary to open two or three hot taps fully, depending upon the model of water heater and the incoming cold water temperature.

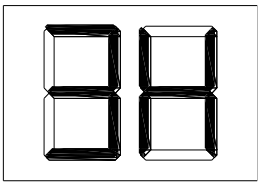

Note: In Step 7, "3H" (627 models) will be shown on the LED display.

After setting the minimum and maximum test point gas pressures:

- Close the outlet isolation valve.
- Remove the manometer and refit and tighten the test point screw and washer.
- Open the isolation valve again so the burners ignite.
- Test for gas leaks..
- Refit the front panel and screws to the water heater.

CLEARING ERROR CODE
If an error code does appear on the LED display during the commissioning process, it will be necessary to clear the error in order to complete the installation.

To clear an error code:

- switch off the electrical supply at the power outlet to the water heater
- check the gas isolation valve at the gas inlet to the water heater is fully open
- wait five (5) minutes
- switch on the electrical supply at the power outlet to the water heater

NOTE: If min/max pressure adjustments were required on the test heater if may be necessary to test all water heaters individually.

PRESET OUTLET TEMPERATURE SETTING
The factory preset outlet temperature setting of the water heater is:

- 70°C as part of a Commpak system

It is usually not necessary to check or adjust the factory preset outlet temperature setting of the water heater, unless the customer or application has a particular requirement for this to be done.

For applications requiring sanitising temperatures, such as a commercial kitchen, it will be necessary to adjust the preset outlet temperature setting and controller to 82°C. Refer to page 34 for details.

If the water heater is installed as part of a circulated hot water flow and return system in a building, the preset outlet temperature setting must be set to at least 60°C. If the water temperature decreases by more than 5°C through a circulated hot water flow and return system due to heat loss in the ring main, the preset outlet temperature setting of the water heater should be set to at least 65°C.

GAS BOOSTER FOR A SOLAR WATER HEATER
Note: AS 3498 requires that a water heater provides the means to inhibit the growth of Legionella bacteria in potable water. When this water heater is used as an in-series booster for a solar water heater it can satisfy this AS 3498 requirement provided it is energised and the booster preset outlet temperature setting is 70°C or higher.

It will be necessary to check and if required to adjust the preset outlet temperature setting of the continuous flow water heater when:

- it is installed as an in-series gas booster to a solar water heater
- it is an existing continuous flow water heater and a solar water heater is then installed.

Note
- Consideration must be given to the delivery temperature to any ablution and public areas such as a bathroom, ensuite or public amenities. Refer to “Hot Water Delivery” on page 26.

TO CHECK OR ADJUST THE PRESET OUTLET TEMPERATURE SETTING
The temperature settings will be displayed on the LED display. The preset outlet temperature settings are:

- 872/862 series 38°C, 40°C, 42°C, 43°C, 45°C, 50°C, 55°C, 60°C, 65°C, 70°C, 75°C, 82°C

It is necessary to have the electrical supply to the water heater switched on during stages of checking or adjusting the preset outlet temperature setting procedure.

⚠ **Warning:** The removal of the front panel will expose 240 Volt wiring. Take care not to touch wiring terminals. The adjustment must be carried out by a qualified person.

⚠ **Warning:** This procedure will involve the adjustment of dip switches. Adjustment of a dip switch should only be made with an insulated tool.

To check or adjust the preset outlet temperature setting:

1. Switch off the electrical supply at the power outlet to the water heater.
2. Remove the screws holding the front panel to the jacket.
3. Gently disengage the front panel and pull forward to remove from the water heater.
4. Switch on the electrical supply at the power outlet to the water heater.
5. Switch dip switches 3 and 4 to the on (up) position on the DIP 1 set of DIP switches on the I.C. Board.

   The current preset outlet temperature setting will show on the LED display.

   If the temperature displayed on the LED display is the desired preset outlet temperature setting, then proceed to step 7, as no further adjustment is necessary.
6. Press the MAX button to increase or the MIN button to decrease the preset outlet temperature setting.

   Each press of the MAX or MIN button will increase or decrease the preset temperature by one increment.

   The MAX and MIN buttons are located underneath the DIP 1 and DIP 2 set of DIP switches.

   Set the LED display to 82 on an 872 series water heater if it is required to deliver sanitising temperatures.
7. Switch dip switches 3 and 4 to the off (down) position.

   The LED display will go blank. The preset outlet temperature setting is now set.
8. Switch off the electrical supply at the power outlet to the water heater.
9. Refit the front panel and screws to the water heater.

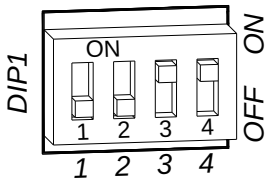

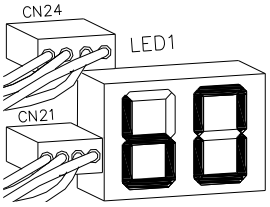

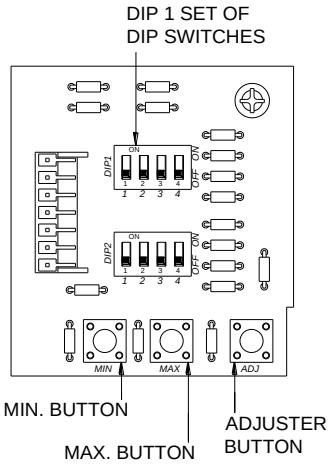

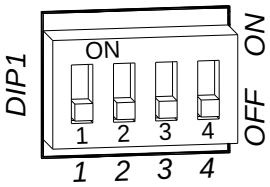

TO TURN OFF THE WATER HEATER

If it is necessary to turn off the water heater on completion of the installation, such as on a building site or where the premises is vacant, then:

- Switch off the electrical supply at the isolating switch to the Commpak (refer to note below).
- Close the gas isolation valve at the inlet to the Commpak.
- Close the cold water, hot water flow and building return isolation valves at the inlet to the Commpak.
- Drain each CFWH if there is a risk of freezing conditions occurring (refer to "Draining The Water Heater" on **page 12**).

Notes:

- The frost protection system will be rendered inoperable if electrical power is not available at the water heater.
- Damage caused by freezing due to the unavailability of power at the water heater is not covered by the Rheem warranty (refer to "Terms of the Rheem Warranty" on **page 4**).
- If the power has been switched off to the water heater and there is a risk of freezing, then it is necessary to drain the water heater (refer to "Draining the Water Heater" on **page 12**).

DRAINING THE WATER HEATER

To drain the water heater:

- Turn off the water heater (refer to "Turn Off The Water Heater" on **page 57).**
- Open the pressure relief valve on the Commpak located on the hot manifold.
- Unscrew the two drain plugs, one each at the cold water inlet and hot water outlet, on the underside of each continuous flow water heater.

  Water will drain from the water heaters.
- When water stops flowing from the water heaters, close the pressure relief valve.

Note: It is recommended not to screw the drain plugs back in, until the water heater is to be turned on again.

START-UP CHECKS

System Pump/s Warning: Dry running of the Pump/s will result in permanent damage and is not covered under the Rheem warranty

1. Before turning 240VAC power on to the hot water system controller ensure the following checks are undertaken.

2. Check & confirm pump/s speed (Item #5A, factory set on number 3).
   Note: Read and comply with the instructions as specified on the TAG tied to end of power lead.

3. Check that the pump/s power supply lead is plugged into the dedicated pump power outlet (Item #3) is plugged in and turned ON.

4. Check individual water heater (Item #22) power supply leads are plugged in (Item #2) and turned ON

5. Turn on the power supply to the hot water system controller (Item #1)
   Check hot water system controller status (as displayed on the control module) (Item #1)
   LCD display is ON & Pump Run LED(s) are illuminated.
   Refer to hot water "Commpak System Controller" on pages **72** to **77** for additional details.

6. Check all water heaters (Item #22) have fired and are operational
   Note: All hot water units have been factory tested, temperature pre-set and gas pressures adjusted and as such no further adjustments are required.

7. Check hot water outlet temperature display (Item #1) registers a temperature rise.
   Turn on several hot water outlets (fixtures) on the installation to check that all the individual Water heaters and pump/s are operating correctly.

8. When satisfied, CLOSE hot water outlet isolation valve (item #10)
   Depress the 'RESET' button on the hot water system control module (item #1) and hold ON for 5 seconds.
   This will enable both the hot water outlet temperature (T1) and the return water temperature (T2) to be displayed simultaneously.
   The Pump will turn OFF when return temperature (T1) has reached 60°C (nominal default value).
   Re-open hot water outlet isolation valve (item #10). Pump will restart and CFHW units will fire.
   Leave running until satisfied with operation.

FINAL CHECKS

Loss of water protection test.

1. Test and confirm pump/s loss of water protection pressure switch (Item #24 & Item # 21A):

   a. Turn off the isolating valve to the pressure switch during the normal operation of the hot water system.
      Undo the bleed / test plug to relieve the pressure.
      This will initiate the pump/s shut down timer (user programmable) nominally set at 15 seconds.
      Check and confirm pump is locked-out on time out.

   b. Screw back in the bleed / test plug and open the isolation valve to the pressure switch.
      This will re-instate operation of pump/s. Check and confirm this on the controller.

2. Check system for any leaks (gas & water)

3. Turn system 240VAC power OFF (Item #1).

   Isolate main water valves (Items #10; #11 & #13); Check and clean the inline cold water supply strainer; hot water return strainer & individual water heater strainers (Items #12; #13A & #22C).

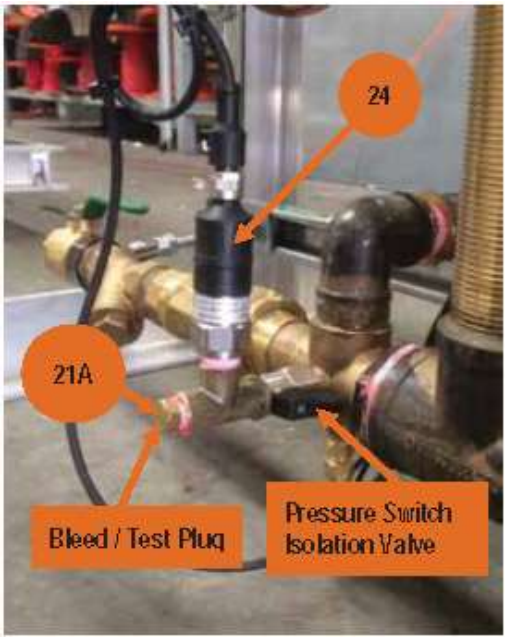

4. Advise customer to check strainers after 1 week usage.

   Continue to check strainers on a weekly basis until they inspect clean.

   Continue to check strainers on a monthly basis until they inspect clean.

   Continue to check strainers on a quarterly basis until they inspect clean.

   Thereafter check every six (6) months.

5. Re-instate Commpak by repeating steps 1 to 8 on **page 58**

6. Fill in commissioning sheet (**page 62**)

7. Rheem Commpak commercial continuous flow water heater can now be left on line.

Finish.

COMMPAK – PUMP INSTALLATION

1. Pump casing arrow to match the flow direction
2. The shaft of the pump MUST be horizontal as shown
3. Never operate the pump “dry”;
4. Ensure cable gland is tight & cable is looped down on exiting of terminal box.
5. Bleed pump by removing slotted disk while pump is running.
6. Test & confirm loss of water protection pressure switch (Item -#24) is operational as per instructions Refer to page 58
7. Clean cold water inlet and hot water return line strainers regularly.

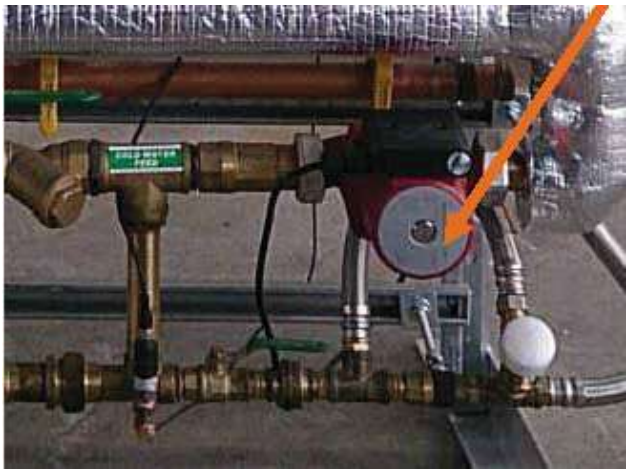

FAULT FINDING PROCEDURE

FAULT: Hot Water System not operating as expected

Possible Causes	Description & Recommended Corrective Action
Power Failure	**Check system controller – Is the LCD temperature display ON** • No Check controller isolator is turned ON. If not turn toggle to the ON position (UP) Note: The controller isolator is an earth leakage (safety switch) and will: ▪ Trip (turn OFF) if an earth fault of 30MA or greater is present ▪ To check for fault unplug all leads from their power outlets ▪ Turn the isolator ON ○ If isolator trips? - Faulty control module. Contact supplier for additional assistance ○ If isolator does not trip? - Plug in each power lead one at a time until isolator trips – leave offending item unplugged & report to supplier ▪ Check 240VAC Supply from distribution board powering Controller Is ON ▪ Check breaker rating is 16A or greater, as tripping may occur on larger systems if below this value • Yes LCD Temperature Display is ON: Power OK
Controller Fault	**Check system Controller – Are any Fault LEDs illuminated** • Yes Faulty T1 or T2 Sensor LED Illuminated ▪ Check connections are good and no breaks in cable. ▪ If Good? Sensor is faulty Replace Sensor • Yes High Temperature LED Illuminated ▪ Check actual water temperature & compare against controller displayed value. ○ If displayed value is incorrect replace T2 sensor ○ If same? Check High Temp setting set value ○ If setting value correct? = Faulty CFWH or incorrect DIP Switch setting ▪ Refer CFWH manual for details • Yes Pump Low Temp Fault LED Illuminated ▪ Check all strainers are clear ▪ Check Pump is ON & operating ▪ Check gas pressure is OK • Yes Pump Lock-out LED Illuminated ▪ Check water supply is turned on ▪ Check pump is On & operational ▪ Check pressure Switch (item 24) contacts are open ▪ Check gas supply is ON & correct pressure NOTE: Controller RESET button will clear any latched fault. Refer "Commpak System Controller" on pages **72** to **77** for additional information **NOTE: If System Controller is faulty, un-plug the pump from the dedicated Pump Power Outlet & Plug into a water heater General Purpose Outlet. System will continue to operate until Controller can be replaced**

Possible Causes	Description & Recommended Corrective Action
Pump Fault	Refer "Pump Manual" on pages **63** to **71** for additional Information **NOTE: If Pump is faulty isolate pump electrically & close valve No. #16. Commpak will operate as per Multipak (Hot water on demand but no return flow) until pump can be replaced.**
CFWH Fault	Refer to Rheem Owner's Guide and Installation Instructions for additional Information

Note: CFWH = *Continuous Flow Water Heater*

COMMPAK – COMMISSIONING SHEET

Customer :

Project & Address:

Package Details:

Installation	OK	Comments
Overall Installation?		
Installation Requirements: Individual Water Heaters Co-axial Flueing		**Compliance to AS/NZS 5601.1 and AS/NZS 3500.4 is mandatory** **Refer: Rheem Owner's Guide & Installation Instructions Models 862627 for fluing requirements.**
Ventilation Requirements?		**Compliance to AS/NZS 5601.1 is mandatory**
Fuel: Natural Gas / LPG		
Gas Pressure During full Load Operation?		**Natural Gas: 1.13 Minimum & Up to 3.5 kPa** **Propane: 2.75 Minimum & Up to 3.5 kPa**
Inlet Water Pressure		
Inlet Water Pressure?		**Minimum 150 kPa & up to 800 kPa**
Valves		
All the Valves are in Open Position?		
Differential Bypass Valve Position?		**Flow & Return System: Set to No. 6** **Dead Leg System: Set to No. 1**
Pressure Safety Valve Operation?		
Pump/s		
Operation?		**Pump Speed: Factory Pre-set to No. 3**
Package Controller (In accordance to "Commpak System Controller" on pages **72** to **77**		
Set Temperature Reached?		
Check Indicators?		
Overall Operation?		
System		
Flow & Return System or Dead Leg System?		
All Water Heater Operations?		
System Temperature Reached & Pump/s Shutdown?		
Differential Bypass Valve Operation?		**Simulate both Flow/Return or Dead Leg Systems**

Comments

Client to carry out regular preventative maintenance as below:
Pump Inlet Strainer; Hot Water Return Strainer & Water Heaters Inlet Strainers:
Check & Clean as per the schedule – Refer to "Commissioning – Final Checks" Steps 3 & 4 on page **58.**

Sign Off

System Commissioned By:	**Customer's Representative:**
Date:	**Date:**

Description	Value
Product name:	UPS 32-100 N 180
Product No:	95906489
EAN number:	5700311289945
Price:	On request
Technical:	
Speed no:	3
Head max:	100 dm
TF class:	110
Approvals on nameplate:	CE
Materials:	
Pump housing:	Stainless steel
	DIN W.-Nr. 1.4301
	AISI 304
Impeller:	Composite, PES/PP
Installation:	
Amb. max at 80 dgr C liquid:	40 °C
Maximum operating pressure:	10 bar
Pipe connection:	G 2
Pressure stage:	PN 10
Port-to-port length: 180 mm	
Liquid:	
Pumped liquid:	Water
Liquid temperature range:	-25 .. 110 °C
Liquid temp:	20 °C
Density:	998.2 kg/m³
Electrical data:	
Power input in speed 1:	280 W
Power input in speed 2:	340 W
Max. power input:	345 W
Mains frequency:	50 Hz
Rated voltage:	1 x 230 V
Current in speed 1: 1.3 A Current in speed	
2: 1.5 A Current in speed 3: 1.52 A	
Capacitor size - run: 9.5 µF	
Enclosure class (IEC 34-5):	X4D
Insulation class (IEC 85):	H
Motor protec:	CONTACT
Thermal protec:	internal
Controls:	
Pos term box:	9H
Others:	
Net weight:	6.4 kg
Gross weight:	6.9 kg
Shipping volume:	0.012 m3

95906489 UPS 32-100 N 180 50

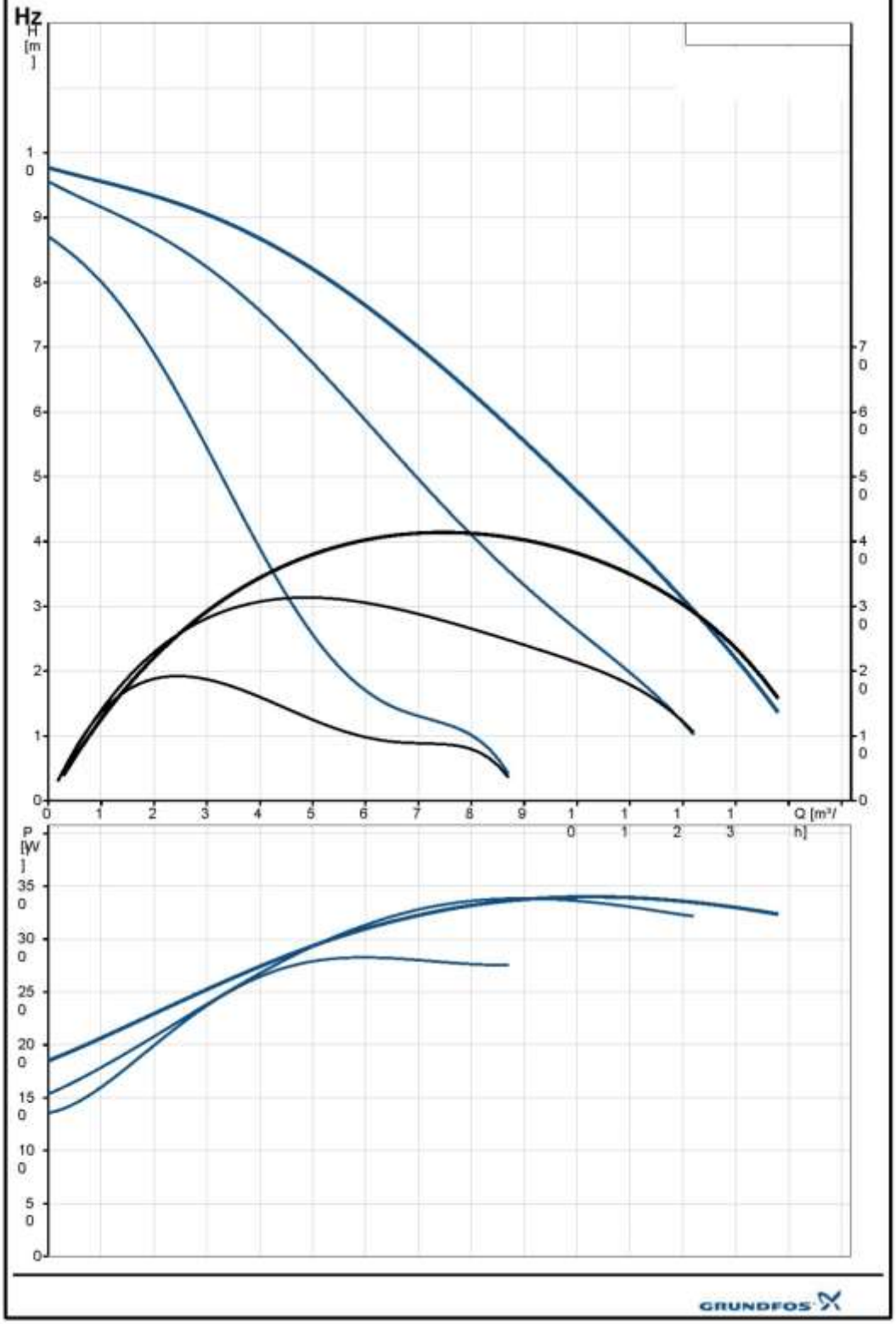

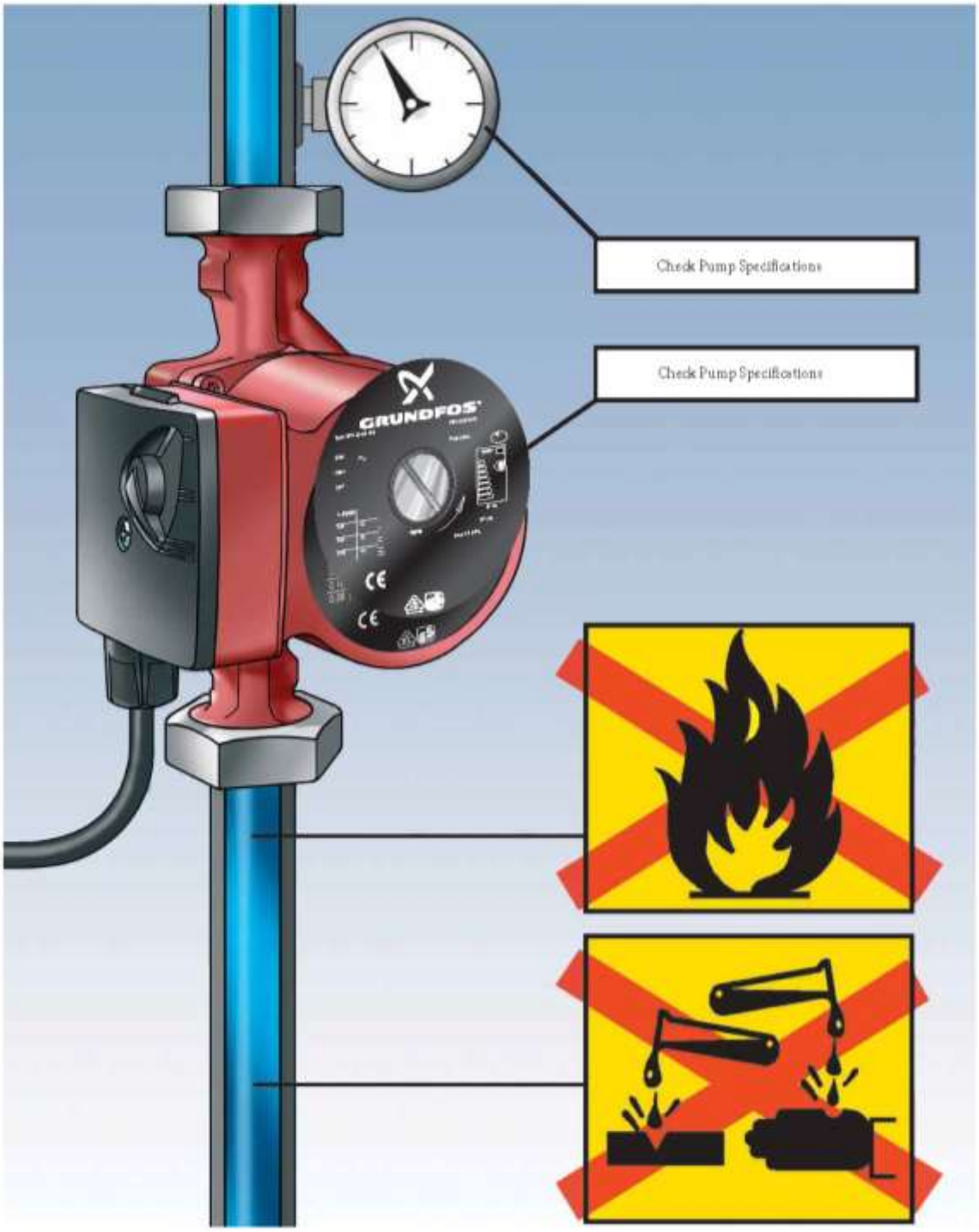
Check Pump Specifications
Check Pump Specifications
GRUNDFOS

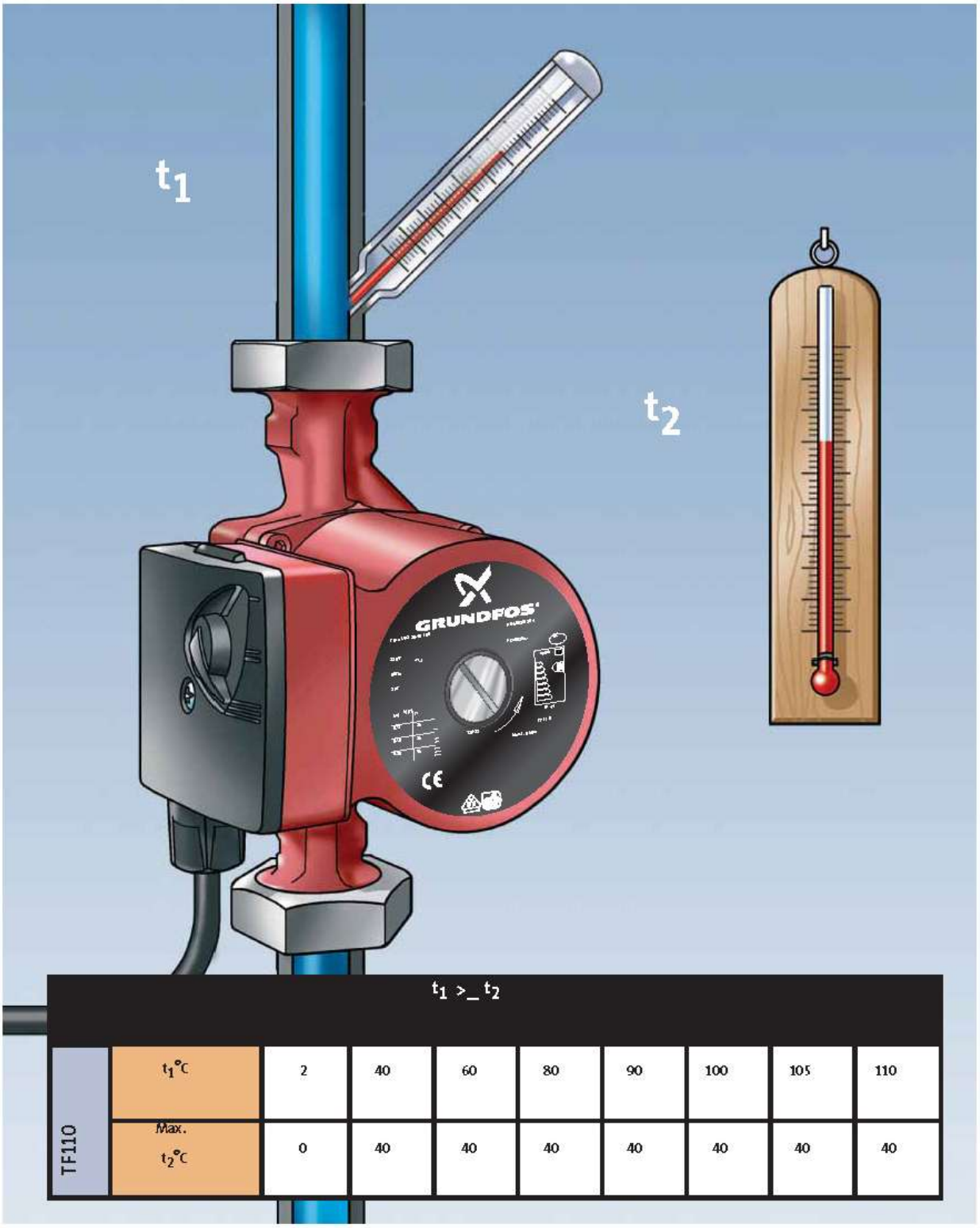

	$t_1 >_ t_2$								
TF110	t_1°C	2	40	60	80	90	100	105	110
	Max. t_2°C	0	40	40	40	40	40	40	40

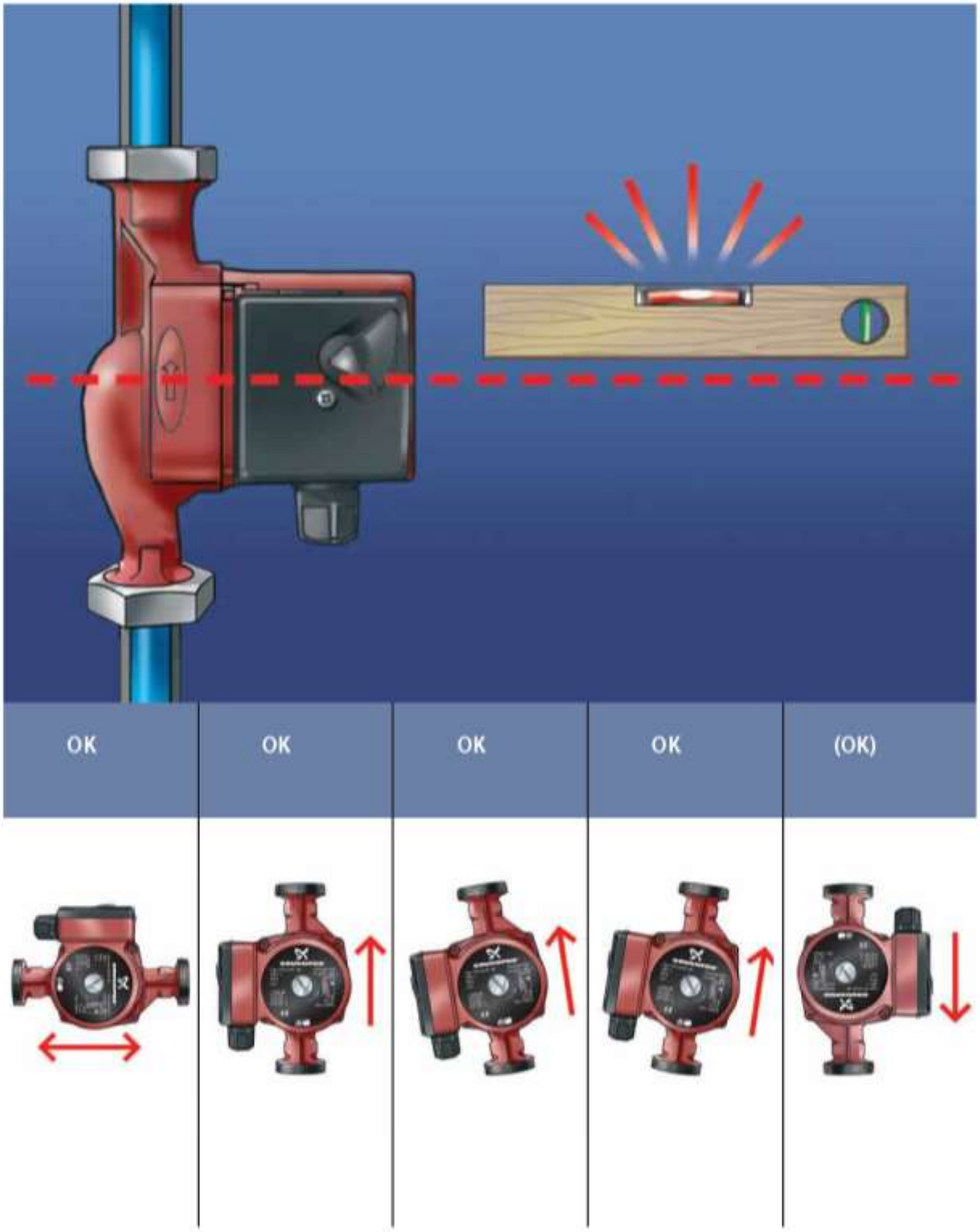
OK
OK
OK
OK
(OK)

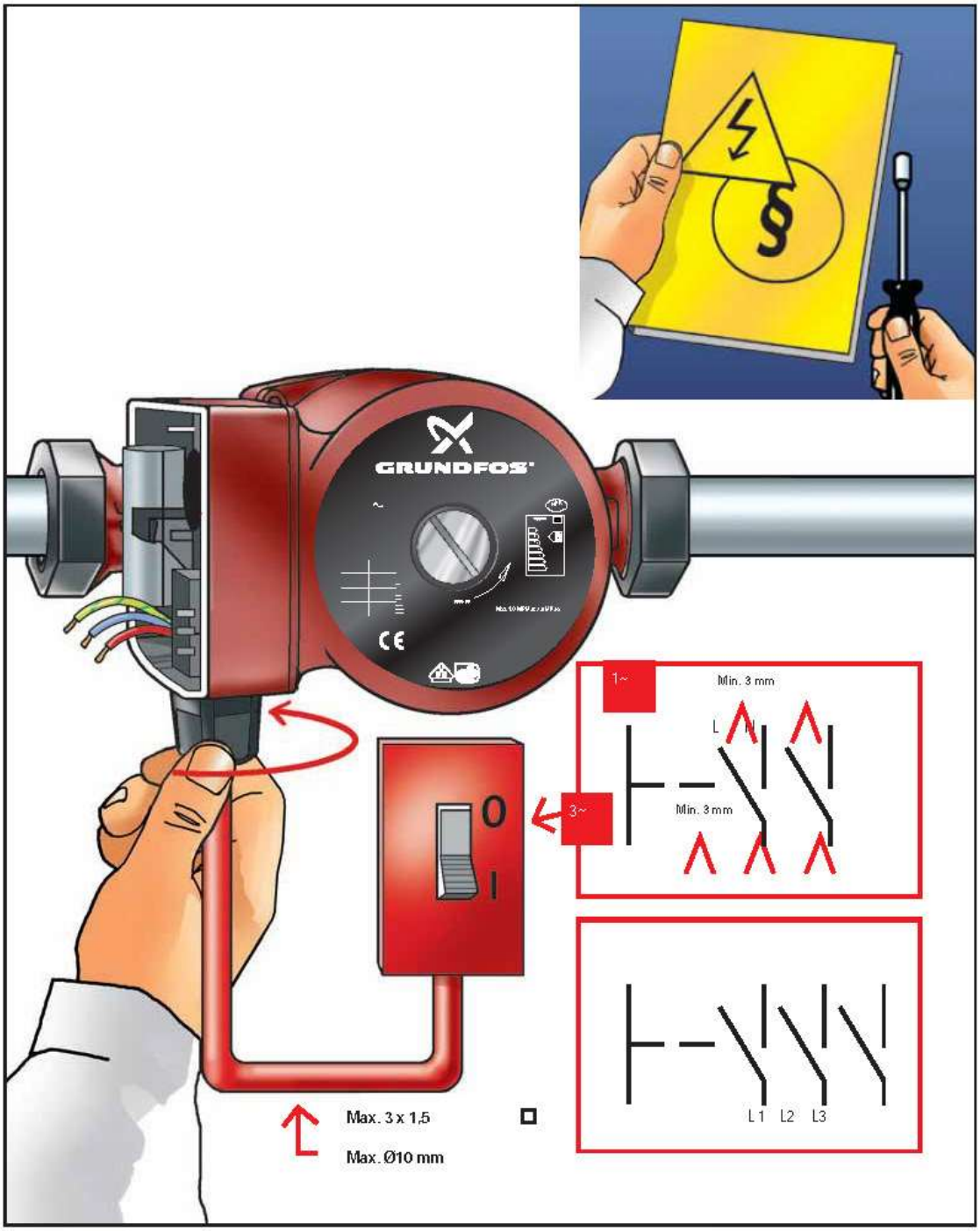
GRUNDFOS
1~
Min. 3 mm
L N
Min. 3 mm
3~
0
I
L1 L2 L3
Max. 3 x 1,5
Max. Ø10 mm

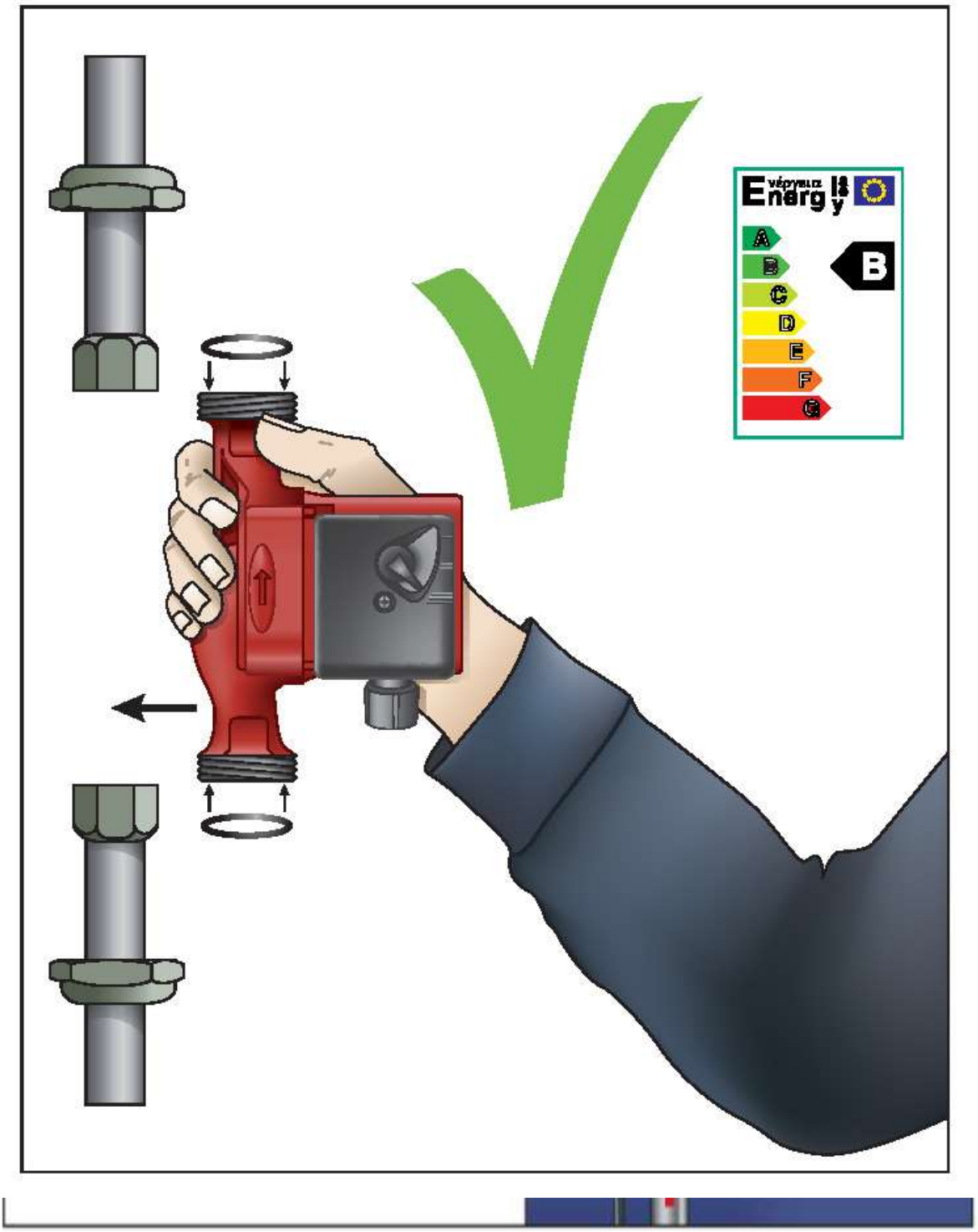
Energy
A
B
C
D
E
F
G
B

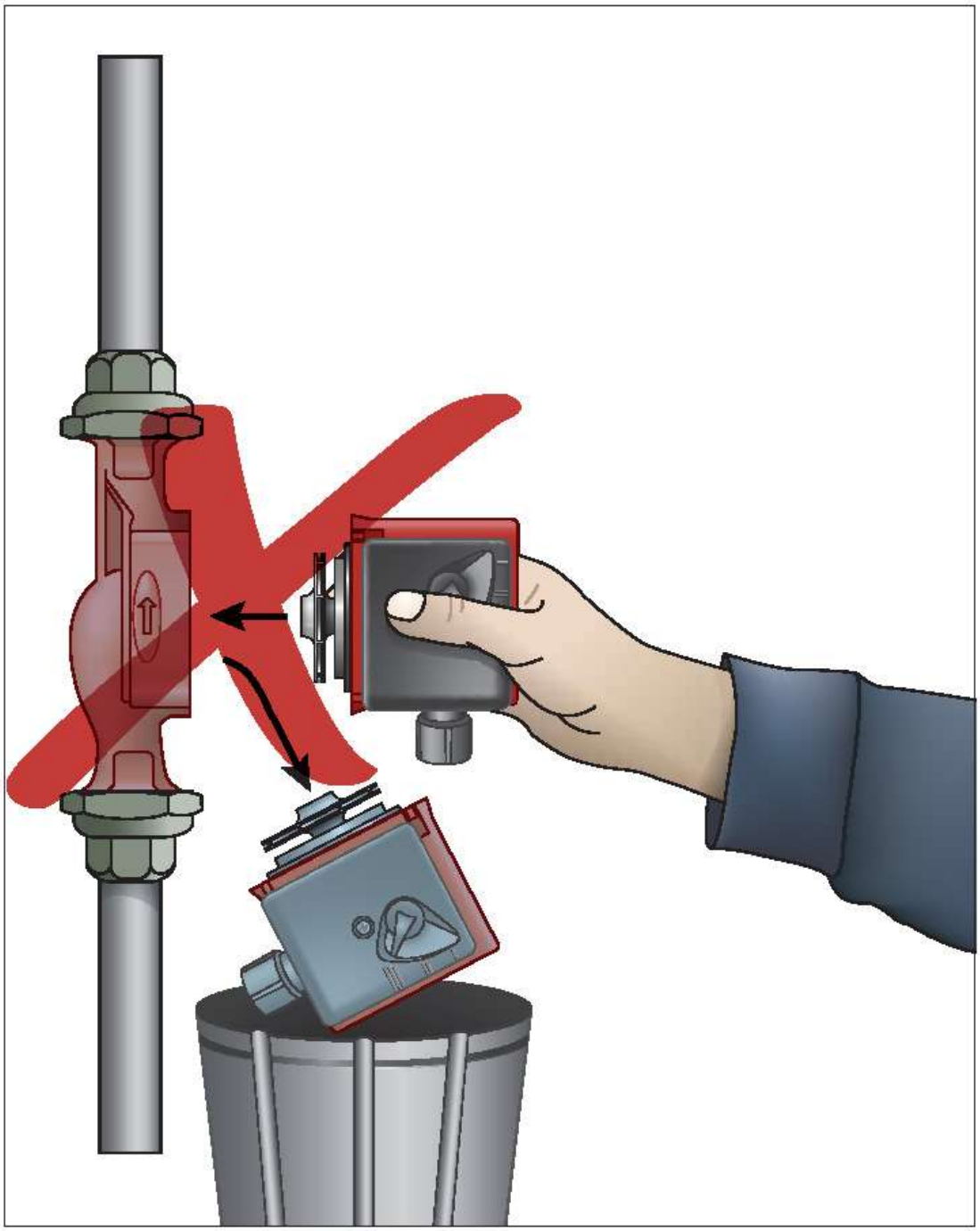

Warning

The use of this product requires experience with and knowledge of the product.
Persons with reduced physical, sensory or mental capabilities must not use this product, unless they are under supervision or have been instructed in the use of the product by a person responsible for their safety.
Children must not use or play with this product.

GB	Grundfos declares that these products are in conformity with the following EU directives:	Grundfos izjavljuje da su ovi proizvodi sukladni slijedećim smjernicama EU:	HR
D	Konformitätserklärung. Grundfos erklärt, dass diese Produkte mit den folgenden EU-Richtlinien übereinstimmen:	Grundfos izjavljuje da su ovi proizvodi u saglasnosti sa sledećim smernicama EU:	SER
F	Grundfos déclare que ces produits sont en conformité avec les directives de l'Union Européenne suivantes:	Societatea Grundfos declară că aceste produse sunt în conformitate cu următoarele directive ale Uniunii Europene:	RO
I	Grundfos dichiara che questi prodotti sono conformi alle seguenti Direttive della Comunità Europea:	Грундфос потвърждава че тези продукти съответстват на следващите директиви на ЕС:	BG
E	Grundfos declara que estos productos son conformes con las siguientes Directivas Europeas:	Firma Grundfos prohlašuje, že výrobky jsou v souladu s následujícími směrnicemi EU:	CZ
P	A Grundfos declara que estes produtos estão em conformidade com as seguintes directivas EU:	Firma Grundfos prehlasuje, že výrobky sú v súlade s nasledovnými smernicami EU:	SK
GR	Η Grundfos δηλώνει ότι τα προϊόντα αυτά συμμορφώνονται προς τις ακόλουθες οδηγίες της Ε.Ε.:	Grundfos bu ürünlerin Avrupa Birliği'nin aşşağ daki Direktiflerine uygunluğunu onaylar:	TR
NL	Grundfos verklaart, dat deze producten in overeenstemming zijn met de volgende richtlijnen:	Grundfos kinnitab, et antud tooted vastavad järgmistele EU normidele:	EE
S	Grundfos försäkrar att dessa produkter är i överensstämmelse med följande EU-direktiv:	Grundfos patvirtina, kad šie produktai atitinka žemiau išvardintas ES normas:	LT
FIN	Grundfos vakuuttaa, että nämä tuotteet täyttävät seuraavien EU direktiivien vaatimukset:	Firma Grundfos paziņo, ka izstrādājumi atbilst sekojošām ES normām:	LV
DK	Grundfos erklærer, at disse produkter er i overensstemmelse med følgende EU direktiver:	Фірма Grundfos заявляє, що дані вироби відповідають наступним нормам ЄС:	UA
PL	Firma Grundfos oświadcza, że dane wyroby są zgodne z niniejszymi wytycznymi UE:	Low Voltage Directive (2006/95/EC). Standards used: EN 60335-1: 2002 and EN 60335-2-51: 2003. EMC Directive (2004/108/EC). Standards used: EN 61000-6-2 and EN 61000-6-3.	
RU	Фирма Grundfos заявляет, что данные изделия отвечают следующим нормам ЕС:		
H	Mi, a Grundfos kijelentjük, hogy ezen termékek megfelelnek az Európai Unió következő irányelveinek:	Bjerringbro, 15th October 2009	
SI	Grundfos izjavlja, da so ti izdelki v skladu z naslednjimi smernicami EU:		

Svend Aage Kaae
Technical Director

COMMPAK CONTROLLER

Overview:

- Commpak uses a Programmable Logic Control (PLC) based control system.
- Commpak is provided with state of the art control system designed to produce the highest efficiency and reliability in our hot water systems.
- New Programmable Logic Control (PLC) based control system is designed for reliable temperature control and monitoring.

Facia Display Panel

State of the art IP 67 rated colour display with smart push button system for easy navigation. Refer to Full specification enclosed for details.

Programmable Logic Controller

Sturdy programmable control system suitable for rigorous conditions. (e.g. extended temperature range, strong vibration, intensive EMC interference). Refer to Full specification enclosed for details.

Temperature Sensors

Immersion type temperature sensor suitable for hot water systems.

- Protection: IP67 rated
- Wetted parts: Stainless Steel 316L
- Contacts: Gold-plated
- Measuring Element: PT100
- Medium Temperature Range: -40^{0}C to 90^{0}C

Refer to complete specification enclosed for details.

Pressure Sensor

Continuous signal pressure transducer suitable for hot water systems.

- Protection: IP67 rated
- Wetted parts: Stainless Steel 316L
- Output: 4-20mA
- Medium Temperature Range: -40^{0}C to 90^{0}C

Refer to Full specification enclosed for details.

Inputs

The module has provision for simultaneous monitoring of two temperature sensors.
The temperature sensors are pre calibrated and do not require any adjustment.

- T1 for the Return Water
- T2 for the Outlet Water.
- 4-20mA signal pressure transducer for pump protection low pressure lockout.

System Operation

System pumps controlled with pre-set T1 and T2 values.

Single pump system

- Pump ON: START when T1 sensor is less than a pre-set value (40^{0}C)
- Pump OFF: STOP when T1 sensor is greater than a pre-set value (60^{0}C) and pump runs for minimum 5.0 minutes.

Note: In the event T2 is below a pre-set value (60^{0}C) for more than 60 seconds pump starts and runs until a pre-set value (62^{0}C) is reached and runs for minimum 2.0 minutes.

Dual Pump System

- Lead & Lag Pumps ON: START when T1 sensor is less than a pre-set value (40^{0}C).
- Lag Pump OFF: STOP when T1 sensor is greater than a pre-set value (50^{0}C).
- Lead Pump OFF: STOP when T1 sensor is greater than a pre-set value (60^{0}C) and pump runs for minimum 5.0 minutes.

Note: In the event T2 is below a pre-set value (60^{0}C) for more than 60 seconds pump starts and runs until a pre-set value (62^{0}C) is reached and runs for minimum 2.0 minutes

Alarm Details

Fault Condition	Local Alarm Raised	BAS Alarm Raised	Reasons for Alarm	Fault Clearing
High Temperature: (System Outlet Temperature is above 80^0C)	Temperature Faults	Temperature Faults	Water heaters malfunctioning Water heater incorrect set temperature Faulty temperature sensors	System locked out, Manual clearing only.
Low Temperature Condition #1: (System Outlet Temperature is below 50^0C for 300 seconds)	Temperature Faults	Temperature Faults	Water heaters malfunctioning Water heater incorrect set temperature Faulty temperature sensors Pump/s not operational	Automatic clearing once the outlet temperature is above 55^0C
Low Temperature Condition #2: (System Outlet Temperature is below 30^0C for 300 seconds)	Temperature Faults	Temperature Faults	Water heaters malfunctioning Water heater incorrect set temperature Faulty temperature sensors Pump/s not operational	System locked out, Manual clearing only.
Low Pressure: (System pressure is below 50kPa for 10 seconds)	Low Pressure Lockout	Low Pressure Lockout	Low cold water supply pressure. Faulty pressure sensor	Automatic clearing once system pressure is above 80kPa.
Pump 1 Faults: (True pump faults monitored via current transformers)	Pump 1 faulty	Common Fault	Faulty pump Pump GPO off Pump not plugged into GPO	Automatic Clearing
Pump 2 Faults: (True pump faults monitored via current transformers)	Pump 2 faulty	Common Fault	Faulty pump Pump GPO off Pump not plugged into GPO	Automatic Clearing
Temperature sensors faulty cable:	Sensor Faults	Common Fault	Faulty sensor cable Sensor loose wiring Sensor not wired	Automatic Clearing
Pressure sensor faulty cable:	Sensor Faults	Common Fault	Faulty sensor cable Sensor loose wiring Sensor not wired	Automatic Clearing
Facia Display faulty cable:	Sensor Faults	Common Fault	Faulty sensor cable Sensor loose wiring Sensor not wired	Automatic Clearing

BMS/BAS Outputs

System provided with three (3) volt free clean contacts.

- Common faults
- Temperature faults
- Low pressure lockout

Other Features

A Set-Up mode is incorporated to allow user access to numerous control parameters (if required) for fine tuning of the control module to best suit the required the application.

Two tier PIN code locked system set-up.

Set-up Level	Access PIN	Access Type	Typical Users
Category A Full Access	**9504**	Complete access to system set-up • System temperature settings • Faults Log • Six monthly service clearing • Alarms clearing • Manual Pump Run function	Rheem Management Rheem Service Technicians
Category B Limited Access	**7337**	Limited access to system set-up • Faults Log • Six monthly service clearing • Alarms clearing • Manual Pump Run function	Building Managers Local Plumbers

Timer Function

The Timer Function is incorporated into the controller to allow the user to be able to setup the hot water system to be powered up and powered down at certain times of the day.

Key Features

- Two (2) Intervals with Power On/Power Off for each day of the week.
- A common setting for the Hot Water System to Power On and Power Off at Two (2) different times on all days of the week.
- Total of sixteen (16) different Power On & Power Off interval settings are available.
- Simple user-friendly application

Set-Up Guide:

1. Enter Category A Full Access Set-Up Level page:
    - Press button ‘B’ and ▼ button together for access.
    - Enter PIN ‘9504’ for access.

2. Select Operation - Timer and Press OK as below

3. Press Next to Access the Time Set Up Page as below

4. Timer Operation is as below

Option #1: Set-Up Guide

Day of the Week	Interval #1		Interval #2	
	Time to Turn On	Time to Turn Off	Time to Turn On	Time to Turn Off
Monday				
Tuesday				
Wednesday				
Thursday				
Friday				
Saturday				
Sunday				

Option #2: Set-Up Guide

Day of the Week	Interval #1		Interval #2	
	Time to Turn On	Time to Turn Off	Time to Turn On	Time to Turn Off
All Days of the Week				

COMMPAK – CONTROLLER WIRING SCHEMATIC PAGE 1

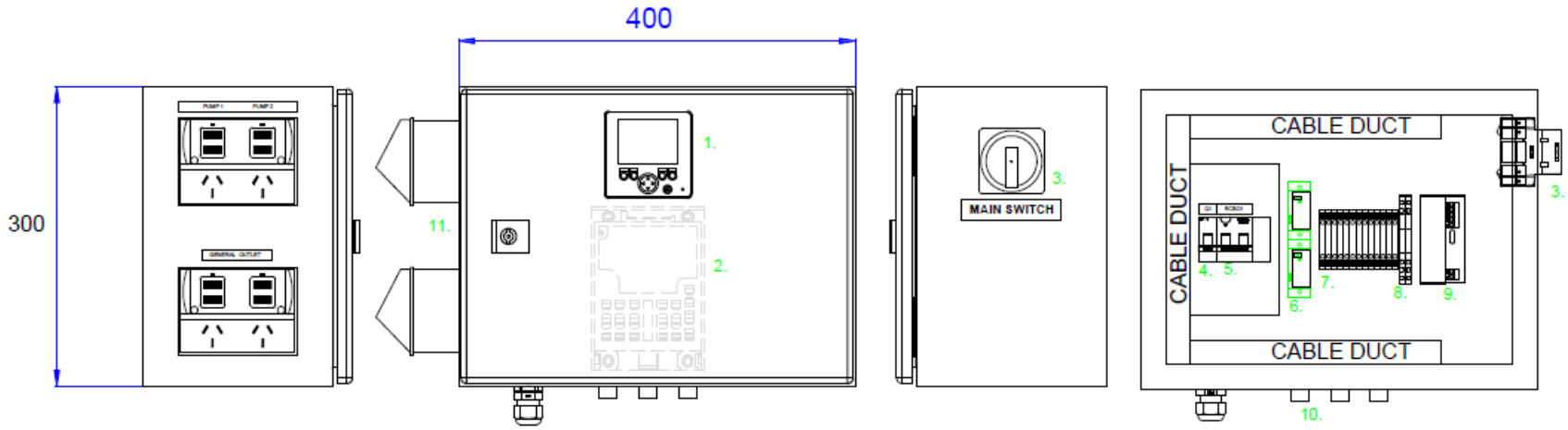

LEFT VIEW

FRONT VIEW

RIGHT VIEW

INTERNAL VIEW

BILL OF MATERIALS

1 HMI
2 PLC
3 MAIN ISOLATOR
4 CB FOR POWER SUPPLY
5 RCBO
6 CURRENT TRANSFORMER/SWITCH PUMP FEEDBACK
7 TERMINALS
8 RELAYS FOR PUMPS
9 POWER SUPPLIES
10 M12 SOCKETS FOR TEMPERATURE AND PRESSURE TRANSMITTERS
11 GPO'S

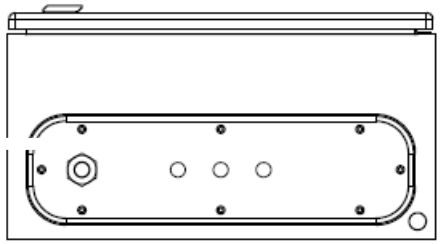

BOTTOM

No	DATE	REVISION ORIGINAL	BY	CHECKED
0	14/01/2016	ORIGINAL ISSUE	SL	SL

PUMP & ELECTRICAL ENGINEERING SERVICES
COMMERCIAL HOT WATER SPECIALISTS
ACN: 085 197 913
Address: 10 James Court, Tottenham VIC 3012
Phone: (03) 9325 1566
Fax: (03) 9325 1567
E-mail: pumpelec@pees.com.au

Description:
P&EES Hot Water System - CP2-14
Controller Drawing - Page #1

By	Drawn	Date	Scale	Drawing No:	Revision
SL	SL	14/01/16	N.T.S	CP-1PH-CD-P1	0

COMMPAK – CONTROLLER WIRING SCHEMATIC PAGE 2

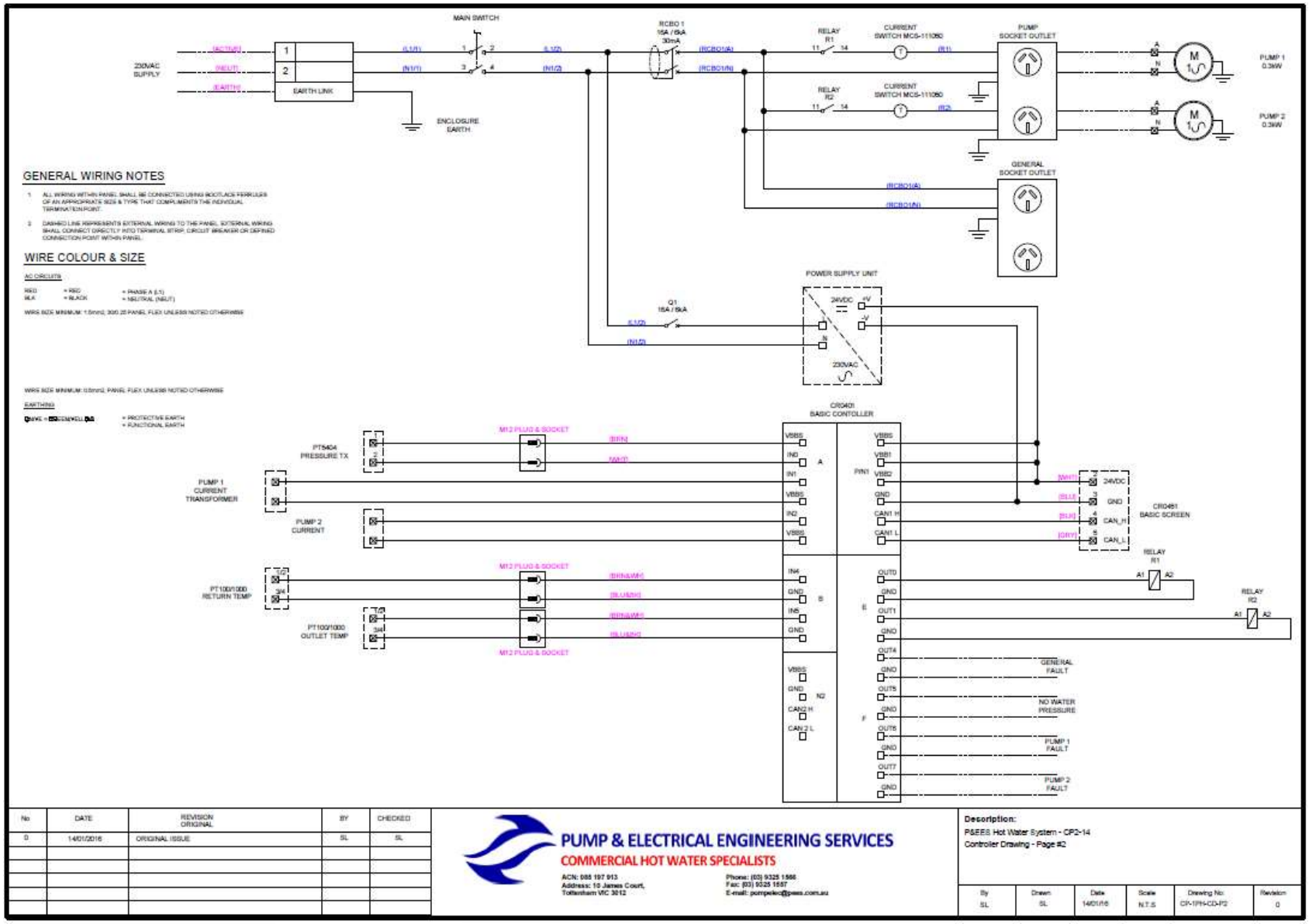

This page is intentionally blank

APPENDIX 1 – LIFTING

Created by R.I.Brown on 12/06/2018 re Building Act 1993 Section 238(1)(a)
Building Regulations 2018
Regulation 126

CERTIFICATE OF COMPLIANCE FOR PROPOSED BUILDING WORK

THIS CERTIFICATE IS ISSUED TO:
RELEVANT BUILDING SURVEYOR

THIS CERTIFICATE IS ISSUED IN RELATION TO THE PROPOSED BUILDING WORK AT:
VARIOUS LOCATIONS

NATURE OF PROPOSED BUILDING WORK:
LIFTING TUBE FOR PROPOSED P&EES PACKAGES

BUILDING CLASSIFICATION:
NON HABITABLE STRUCTURE *BCA CLASSIFICATION: 10*

PRESCRIBED CLASS OF BUILDING WORK FOR WHICH THIS CERTIFICATE IS ISSUED:
DESIGN OR PART OF THE DESIGN OF BUILDING WORK RELATING TO STRUCTURAL MATTER

DOCUMENTS SETTING OUT THE DESIGN THAT IS CERTIFIED BY THIS CERTIFICATE:

Document no.	Document date	Type of document (e.g. drawings, computations, specifications, calculations etc.)	Number of pages	Prepared by
21-232_STR_ REV 1	23-04-21	DRAWINGS	2	RI BROWN PTY LTD
21-232_COMPS_ REV 1	23-04-21	COMPUTATIONS	13	RI BROWN PTY LTD

PERFORMANCE SOLUTION:
A performance solution forms part of the design certified by this certificate. The performance solution complies with the following performance requirements of the NCC

Relevant performance requirement	Details of performance solution required by regulation 124

THE DESIGN CERTIFIED BY THIS CERTIFICATE COMPLIES WITH THE FOLLOWING PROVISIONS OF BUILDING ACT 1993, BUILDING REGULATIONS 2018 OR NATIONAL CONSTRUCTION CODE:

Act, Regulation or NCC	Section, Regulation, Part, Performance Requirement or other provision
BUILDING REGULATIONS 2018	NCC 2019 VOL 2
NCC 2019 and relevant standards	AS/NZS 1170.0:2002, 1170.1:2002, 4100:1999

I prepared the design, or part of the design, set out in the documents listed above.

I certify that the design set out in the documents listed above complies with the provisions set out above.

I believe that I hold the required skills, experience and knowledge to issue this certificate and can demonstrate this if requested to do so.

ENGINEER:

Name: ***RUSSELL BROWN OF R.I BROWN PTY LTD.***

Address: 72 ***LINCOLN ROAD, ESSENDON, VIC, 3040***

Email: ***info@ribrown.com.au***

Building practitioner registration category and class: ***CIVIL ENGINEER***

Building practitioner registration no.: ***EC-1206***

SIGNATURE:

BuildingPractitioner:..... Date 26/04/2021

RUSSELL IAN BROWN EC-1206

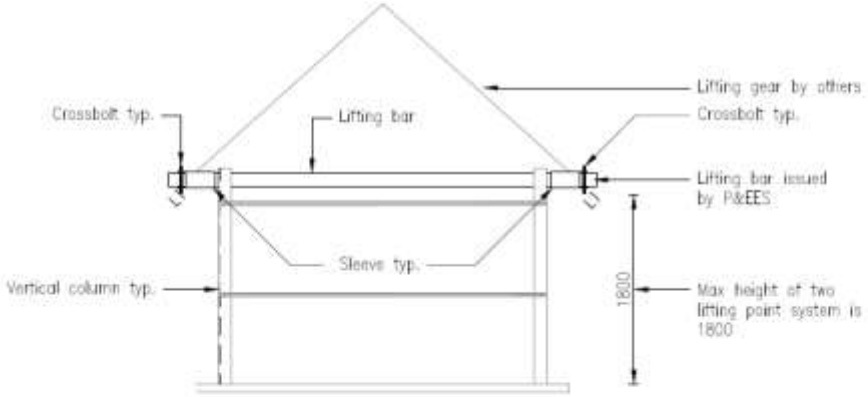

ELEVATION VIEW

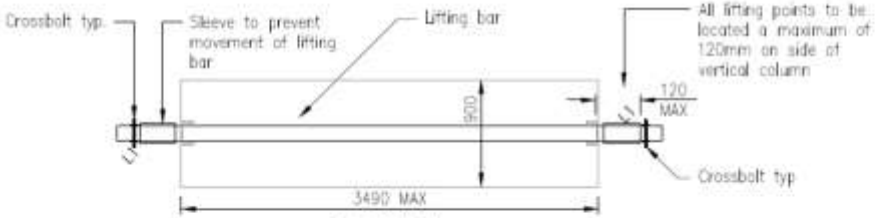

PLAN VIEW

TYPICAL TWO LIFTING POINT SYSTEM

NTS

FRAMING SCHEDULE			
SPECIFICATION	MEMBER	MAX WEIGHT (kg)	LIFTING SYSTEM
33.7 x 3.4 PO 350 MPa CHS/ 33.7 x 3.20 350 MPa CHS	LIFTING BAR	0-400	TWO POINT LIFTING SYSTEM
42.4 x 3.4 PO 350 MPa CHS/ 48.0 x 3.20 350 MPa CHS	LIFTING BAR	401-800	TWO POINT LIFTING SYSTEM
LI		-	LIFTING POINTS

LIFTING SYSTEM	MAX LENGTH (mm)	MAX WEIGHT (kg)
TWO POINT LIFTING SYSTEM	400-3490	50-800

LIFTING INSTRUCTIONS:

1. Lift to be conducted only when wind speed is less than 23km/hr. Wind speed shown is a guide only. Crane crew to use their discretion.
2. Maximum hoisting velocity of 1.0m/s
3. Care shall be taken while lifting to ensure lifting chains are evenly loaded by gently taking the load to just off the ground, examining and returning to ground prior to lift.

NOTE:

Drawings are NOT TO SCALE, and NOT proportionate to each other.

STANDARD SPECIFICATION NOTES:

JOB SPECIFIC NOTES

G1. This drawing shall be read in conjunction with the package specifications.

G2. Drawing subject to change without notice. All dimension in mm UNO. Do not scale drawings.

G3. This drawing remains the property of "P&EES" and shall not be copied in part or full and used for any other purposes than being reference material along with Pump Packages supplied by "P&EES".

STEEL NOTES:

S1. All steelwork shall be in accordance with AS 4100.

S2. Welds to be 6 mm cont. fillet or single vee butt U.N.O. All butt welds to develop the full strength of min. member. All fillet welds to develop 75% strength of min. member.

S3. Bolts shall be mild steel in 1.5 mm clearance holes. Where high strength (HS) bolts are specified they shall be in accordance with AS 1252.

S4. Members bent will not be accepted.

Rev	Description	Date
1	Issued For Construction	23/04/2021

Project
Lift Tube For P&EES Packages
Address
10 James Court, Tottenham VIC
Client
Pump & Electrical Engineering Services

R.I.BROWN
R.I. Brown Pty Ltd
72 Lincoln Road, Essendon Victoria 3040
(03) 9374 2877 info@ribrown.com.au

Date	Drawing Title		
April 2021	P&EE Packages of 400mm-3900mm		
Scale @ A3	Designed	Drawn	Checked
NTS	RIB	PM	RIB
	Project No.	Drawing No.	Rev
	21-232	S01 of S02	1

This page is intentionally blank

RHEEM AUSTRALIA PTY LTD
A.B.N. 21 098 823 511
www.rheem.com.au

FOR SERVICE TELEPHONE
131 031 AUSTRALIA
0800 657 335 NEW ZEALAND

Revision Date: Mar 2022
AQ0901141 Revision B
EPCR: 220202